2nd Quarter Inspection Report
FY 2006

U. S. Department of Labor
Mine Safety and Health Administration

Activity Data

1. Action: a. New Entry ☐ b. Update ☑
2. Activity Code: E01
3. Event Number: 4476283
4. Date Event Started: 1/3/2006
5. Date Event Finished: 3/30/2006
6. Mine ID: 42-01715
7a. Organization Code (Mine Assignment): 20905
b. Work Group Identifier: 01
9. Company Name: GENWAL RESOURCES INC
8a. Organization Code (AR Assignment): 20905
b. Work Group: 01
10. Mine Name: CRANDALL CANYON MINE
11. Report Type (check): a. First ☐ b. Interim ☐ c. Last ☐ d. Not Applicable ☑
12. Area of Inspections: a. Active Sections 1 b. Idle Sections 0
c. Outby Areas ☑ d. Shafts/ Slopes ☐ e. Surface Areas (UG) ☑ f. Surface Workings ☐ g. Company Records ☑ h. ATF ☑ i. Impoundments ☐ j. Refuse Piles ☐
k. Major Construction: (1) Shaft/ Slope Sinking 0 (2) Impoundment Construction 0 (3) Buildings 0 (4) Dragline/ Shovel: 0 (5) Other 0 l. Miscellaneous ☐
m. MMU/Pit Number: (1) 009

13. Number of Samples Collected: a. Air Samples 1 b. Rock Dust Spot 0 c. Rock Dust Survey 0 d. Respirable Dust 10 e. Noise 7 f. Other 0

14. Impoundments/Refuse Piles:

a. Number	b. FHC	c. Configuration

15. Prime Independent Contractor Codes (Major Construction)

16. Inspection Results

	Citations		Orders		Safeguards		Other	
	Coal Opr	Ind Con	Coal Opr	Ind Con	Coal Opr	Ind Con	Coal Opr	Ind Con
a. This Inspection								
(1) New Issuances	6							
(2) Terminations/Vacations	6							
(3) Modifications/Extensions								
(4) Left Pending								
b. Previously Issued								
(1) Modifications/Extensions								
(2) Terminations/Vacations								

18. Signature and Card Number of Authorized Representative/ Right of Entry Person(s) Responsible for Activity

Signature

Card Number 23799

c.

d.

Key Entered By

Date

17. Remarks:

no rock dust survey conducted. Section is re-treating.

MSHA Form 2000-22. Oct. 85 (Revised) Previous editions are Obsolete

MSHA Form 7000-10H, June 93 (revised)

GENERAL INFORMATION COVER SHEET

Inspection Code EO1 Event No. ~~4476253~~

Company Name GENWAL RESOURCES

Mine Name CRANDELL CANYON MINE

Mine I.D. Number 42-01735

Date(s) of Mine File Review 1-6-06

D Status _____ Citation/Order No. _____ Date _____

Dates of Inspection: began 2-14-06 completed 3-30-06

Pre-Inspection Conference Date 2-14-06

Company Representative(s) JACK MARIONS - STEVE RADMALL - JIM PRUITT

Miners Representative(s) _____

NONE

Post-Inspection Conference Date 3-29-06

Company Representative(s) JACK MARIONS - GARY PEACOCK - JIM PRUITT

Miners Representative(s) NONE

Comments: _____

Inspector's Initials TA Supervisor's Initials and Date TOF

*U.S. Government Printing Office: 1997 - 508-470

ine Information Form

Page 1

Mine Safety and Health Administration

New	All fields are required
Change	X The Mine ID Number is required, otherwise fill out only those fields that have changed

1. MSHA Mine ID Number: 42-01715

2. Operating Company Name: GENWAL RESOURCES INC

3. Mine or Mill Name: CRANDALL CANYON MINE

3a. Mine Emergency Phone No:

4. Type of Operation: Coal ☐ Metal/Non-Metal ☐

5. Portable Operation ☐

6. Primary Mine Type: Underground ☐ Surface ☐ Facility ☐

7. MSHA Office Code:

8a. Work Group

8b. Travel Area

9. Nearest Town, Landmark, or Post Office:

10. County Name Where Mine Is Located:

11. State Abbreviation

12. Cong. Dist. (Coal Only)

13. Mileage from Field Office:

14. Directions to Operation from Field Inspection Office:

15. Total Employees: 83

16. Schedule of Operation:
a. Hours per Production Shift ____ b. Production Shifts per Day ____ c. Maint. Shifts per Day ____ d. Work Days per Week ____

17. Longitude and Latitude: (Coal Only)
a. Longitude: Degrees ____ Minutes ____ Seconds ____ b. Latitude: Degrees ____ Minutes ____ Seconds ____

18. Mine Status
New Mine ☐ Active ☐ Intermittent ☐ Non-Producing ☐ Abandoned ☐ Temporarily Idle (Coal Only) ☐ Abandoned & Sealed (Coal Only) ☐

19. Status Date (mm/dd/yyyy): ____/____/____

20. Types of Minerals being Extracted or Processed:
a. Primary Commodity ____ Secondary Commodity (Optional) ____
c. Other Commodities (Optional) ____

21. Mine Characteristics:
a. Applicable to ALL Mines (check all that apply)
Auger ☐ Dredge ☐ Laboratory ☐ Mill/Prep Plant/ Loading Dock ☐ Open Pit/Strip ☐ Shop or Yard ☐ Remining Culm Bank/ Refuse Pile/Tailings ☐

b. Applicable to Coal Mines Only
Highwall Miner ☐

c. Applicable to Metal and Non-metal Mines Only
Adit ☐ Block Caving ☐ Cut and Fill ☐ Dimension ☐ Quarry ☐ Longwall ☐
Shaft ☐ Stope ☐ Heap Leaching ☐ In-situ Leaching ☐ Room and Pillar ☐

22. Other Mine Information:
a. Applicable to All Mines (check all that apply)
103(i) Status: Ignition ☐ Hazard ☐ 6 Day ☐ 10 Day ☐ 15 Day ☐ Removed ☐ Date Entered 103(i) Status: (mm/dd/yyyy) ____
Explosives Used ☐ Explosives Stored on Surface ☐ Explosives Stored Underground ☐ Treasury Permit License ☐
Government Owned ☐ Government Operated ☐ Mine Rescue Station at Mine ☐ Safety Committee at Mine ☐ Methane Liberation 0 cubic ft./ 24 hrs.

b. Applicable to Coal Mines Only
No. of Producing Pits ____ No. of Non-Producing Pits ____ No. of Drift Openings ____ No. of Slope Openings ____ No. of Shaft Openings ____ Avg. Daily Coal Production 1300 tons
Primary Coal Bed Name ____ Avg. mine Height (inches) ____ Surface Mines: CH4/02 Tests Required ☐

c. Applicable to Metal and Nonmetal Mines Only
Mine Gas Category: ____ Number of Impoundments: ____ No. of Escapeways to Surface: ____ No. of Hoists: ____ No. of Refuse Chambers: ____
Associated Cement Mill ☐ Kilns ☐ Electrowinning as Part of Milling ☐ Produces Ground Silica as a Product ☐ Hazardous Waste Burned as Fuel ☐ Channel Burners ☐ Wire Saws ☐
Metal Refinery as Part of Milling ☐ Retort ☐ Roaster ☐ Mechanical Ventilation for Underground Mine ☐ Natural Ventilation for Underground Mine ☐

Plan Review

U.S. Department of Labor
Mine Safety and Health Administration

MSHA Office: PRICE, UT.
2. Mine ID: 42-03715
3. Mine Name: CRANDALL CANYON MINE
4. Company Name: GENWAL RESOURCES, INC
5. Location (No. and Street, City or Town, State, & Zip code)

Roof Control (briefly describe)

☒ Adequate

☐ Deficiencies In Plan

Ventilation (briefly describe)

☒ Adequate

☐ Deficiencies In Plan

Issuing Inspector Signature: Signature
Date: 3-30-06
Supervisor Signature: Signature
Date: 3/30/06

MSHA Form 2000-204, Feb 89

921.DAT

&l1O (s4B (s0B

UNITED STATES DEPARTMENT OF LABOR
MSHA LABORATORIES - MOUNT HOPE, WEST VIRGINIA
ANALYSIS OF AIR SAMPLES

Mine: CRANDALL CANYON MINE
Company: GENWAL RESOURCES INCORPORATED

Mine ID: 4201715
Inspector: TERRY ANDERSON

Date(s) Collected: 03/23/2006
Office: 905

BOTTLE NUMBER	LOCATION IN MINE	CARBON DIOXIDE	OXYGEN	METHANE	ETHANE	CUBIC FEET AIR PER MINUTE	CUBIC FEET METHANE IN 24 HOURS
J3285	100FT INBY MAIN FAN - RETURN ENTRY	0.110	20.91	0.000	0.000	238317	0

THE PERCENTAGE OF NITROGEN CAN BE DETERMINED BY SUBTRACTING THE SUM OF THE REPORTED VALUES FROM 100.00

U.S. Department of Justice
Bureau of Alcohol, Tobacco, Firearms and Explosives

Report of Violations

Instructions

Please write firmly with a ball point pen when completing this form. ATF officers will prepare this form in triplicate. The original copy will be given to the proprietor or a responsible representative. The remaining copies will be submitted with the completed inspection report. Supervisors will detach one copy from the completed report for their files.

Name of Proprietor	Street Address	City	State	ZIP Code	County	Page 1 of 1 Pages
GENUAL RESOURCES						

License/Permit/Registry Number *(if any)*	Expiration Date	Date(s) or Period of Inspection
		3-27-06

Inspection Results

An examination of your premises, records and operations has disclosed the following violations which have been explained to you:

Number	USC or CFR Citation	Nature of Violation	Corrective Action to be Taken *(If not corrected immediately)*	Date Corrections to be Made *(If not corrected immediately)*
		NO VIOLATIONS OBSERVED		

ATF E-Form 5030.5
Revised April 2005

Mine Operator's Respirable Dust Sampling Program Survey

U. S. Department of Labor
Mine Safety and Health Administration

1. Date	2. District	3. Mine ID Number	4. Mine Name
3-30-06	9	42-01715	CRANDALL CANYON MINE

5. Company: GENWAL RESOURCES INC

6. Name (person responsible for calibration and maintenance of approved sampling devices)

7. Name (person qualified to conduct sampling program)

8. Number of Dust Pumps (in use at mine)

9. All Dust Pumps Have Been Calibrated within Last 200 Hours ☐ Yes ☐ No

10. Name(s) of Person(s) Assigned to Check Pumps During Sampling

11. Results of at Least Six Checks by Soap Film Calibrator

Check	Pump Number													
1			NO PUMPS CHECKED THIS INSP.											
2														
3														
4														
5														
6														
7														
8														
9														
10														
Avg														

12. Reverse May Be Used for Remarks

Signature

13. Person Collecting

Attach a copy of this form to the Technical Inspector's Appraisal of the Dust Control Plan, MSHA Form 2000-86.

Rock Dust Sample Submission Form

U.S. Department of Labor
Mine Safety and Health Administration

☐ Spot ☑ Survey

Collector	Field Office	F.O. Code
terry ray anderson (23799)	Price, UT	0905

Inspector Email	Supervisor Email	Clerk Email	Manager Email
anderson.terry@dol.gov	farmer.ted@dol.gov	beacco.alice@dol.gov	davis.allyn@dol.gov

Mine ID	Mine	Company
42-01715	CRANDALL CANYON MINE	GENWAL RESOURCES INC

Event Number	MMU #1	Super-Section	MMU #2	Date Collected
4476283	009-0 (A)	No		3/23/06

Sampling Area	Zero Point
no sample taken	no sample taken

Collector's Comments: no sample taken. Section is retreating.

☐ Advancing
☑ Retreating

Lab Number	Bag Number	Sample Type	Location in Mine	Intake/ Return	Handheld CH4	Bottle No. (If App.)	Bottle Analysis	Dust Analysis	Required	Compliant
	0	No Sample	no sample taken							

For Laboratory Use Only

Date Received	Lab Numbers	to	Date Emailed

Lab Comments

Diesel Equipment Inventory

U.S. Department of Labor
Mine Safety and Health Administration

Mail To: Approval and Certification Center
P.O. Box 251, RR No. 1
Industrial Park Boulevard
Triadelphia, WV 26059

(Attn: Mine Equipment Branch)

Attention—For additional information contact the "Mine Equipment Branch" at (304) 547-0400 or (FTS) 723-1417.

1. Verify Type (check one)
- ☐ Active Machine
- ☐ Delete Machine

2. Date Prepared: 3-30-06

3. Name of Inspector: JERRY ANDERSON

4. AR Number: 23799

5. Field Office ID: 20905 - 01

6. Mine Name: CRANDALL CANYON MINE

7. Mine ID: 42-01715

8. Equipment Approval Number (if applicable)

9. Equipment Manufacturer

10. Equipment Model Number

11. Equipment Type

12. Serial Number

13. Date Manufactured

14. Engine Manufacturer

15. Engine Model

16. Machine Features (check type(s) applicable)
- ☐ Methane Monitor
- ☐ 2G Electrical Components
- ☐ Rail-Mounted

17. Type of Mine (check one)
- ☒ Coal
- ☐ Metal/Nonmetal

18. Comments:

NO NEW EQUIP THIS INSP

Mine Citation/Order

U.S. Department of Labor
Mine Safety and Health Administration

Section I--Violation Data

Mo Da Yr	2. Time (24 Hr. Clock)		3. Citation/ Order Number
02/14/2006	0855		7282793

4. Served To	5. Operator
Steve Radmall, Safety	GENWAL RESOURCES INC
6. Mine	7. Mine ID 42-01715 (Contractor)
CRANDALL CANYON MINE	8a. Written Notice (103g) ☐

8. Condition or Practice

The #1 South Mains belt line was not being maintained in a safe operating condition. Between #2 and #3 x-cut and #6 and #7 x-cut on the off walkway side, 2 bottom roller brackets were cut into allowing the bottom belt to ride over against the belt structure in 5 to 6 locations on the walk way side and caused the structure to be warm to hot to the touch. The belt was shut off until repairs could be made.

See Continuation Form (MSHA Form 7000-3a) ☐

9. Violation	A. Health ☐ Safety ☑ Other ☐	B. Section of Act	C. Part/Section of Title 30 CFR	75.1725(a)

Section II--Inspector's Evaluation

10. Gravity:
A. Injury or Illness (has) (is): No Likelihood ☐ Unlikely ☐ Reasonably Likely ☑ Highly Likely ☐ Occurred ☐
B. Injury or illness could reasonably be expected to be: No Lost Workdays ☐ Lost Workdays Or Restricted Duty ☑ Permanently Disabling ☐ Fatal ☐
C. Significant and Substantial: Yes ☑ No ☐ D. Number of Persons Affected: 006

11. Negligence (check one) A. None ☐ B. Low ☐ C. Moderate ☑ D. High ☐ E. Reckless Disregard ☐

12. Type of Action	104(a)	13. Type of Issuance (check one)	Citation ☑	Order ☐	Safeguard ☐

14. Initial Action A. Citation ☐ B. Order ☐ C. Safeguard ☐ D. Written Notice ☐ E. Citation/ Order Number F. Dated Mo Da Yr

15. Area or Equipment

16. Termination Due	A. Date Mo Da Yr	02/14/2006	B. Time (24 Hr. Clock)	1030

Section III--Termination Action

17. Action to Terminate: Repairs were made to the belt rollers.

18. Terminated	A. Date Mo Da Yr	02/14/2006	B. Time (24 Hr. Clock)	1030

Section IV--Automated System Data

19. Type of Inspection (activity code)	E01	20. Event Number	4476283	21. Primary or Mill	
22. Signature				23. AR Number	23799

MSHA Form 7000-3, Mar 85 (revised) In accordance with the provisions of the Small Business Regulatory Enforcement Fairness Act of 1996, the Small Business Administration has established a National Small Business and Agriculture Regulatory Ombudsman and 10 Regional Fairness Boards to receive comments from small businesses about federal agency enforcement actions. The Ombudsman annually evaluates enforcement activities and rates each agency's responsiveness to small business. If you wish to comment on the enforcement actions of MSHA, you may call 1-888-REG-FAIR (1-888-734-3247), or write the Ombudsman at Small Business Administration, Office of the National Ombudsman, 409 3rd Street, SW MC 2120, Washington, DC 20416. Please note, however, that your right to file a comment with the Ombudsman is in addition to any other rights you may have, including the right to contest citations and proposed penalties and obtain a hearing before the Federal Mine Safety and Health Review Commission.

Mine Citation/Order

U.S. Department of Labor
Mine Safety and Health Administration 4-12-06 Assem

Section I—Violation Data

Mo Da Yr 02/14/2006	2. Time (24 Hr. Clock) 0915		3. Citation/ Order Number 7282794
4. Served To Steve Radmall, Safety		5. Operator GENWAL RESOURCES INC	
6. Mine CRANDALL CANYON MINE		7. Mine ID 42-01715 (Contractor)	

8a. Written Notice (103g) ☐

8. Condition or Practice

Accumulation of float coal dust were present on the belt structure, electrical dist box and the drive motors at the #2 drive area, x-cut #18 in the South Mains belt line.

See Continuation Form (MSHA Form 7000-3a) ☐

9. Violation	A. Health ☐ Safety ☑ Other ☐	B. Section of Act	C. Part/Section of Title 30 CFR 75.400

Section II—Inspector's Evaluation

10. Gravity:
A. Injury or Illness (has) (is): No Likelihood ☐ Unlikely ☐ Reasonably Likely ☑ Highly Likely ☐ Occurred ☐
B. Injury or illness could reasonably be expected to be: No Lost Workdays ☐ Lost Workdays Or Restricted Duty ☑ Permanently Disabling ☐ Fatal ☐
C. Significant and Substantial: Yes ☑ No ☐
D. Number of Persons Affected: 006

11. Negligence (check one) A. None ☐ B. Low ☐ C. Moderate ☑ D. High ☐ E. Reckless Disregard ☐

12. Type of Action 104(a)

13. Type of Issuance (check one) Citation ☑ Order ☐ Safeguard ☐

14. Initial Action A. Citation ☐ B. Order ☐ C. Safeguard ☐ D. Written Notice ☐
E. Citation/ Order Number
F. Dated Mo Da Yr

15. Area or Equipment

16. Termination Due	A. Date Mo Da Yr 02/14/2006	B. Time (24 Hr. Clock) 1005	

Section III—Termination Action

17. Action to Terminate The drive area was washed and rock dusted.

18. Terminated	A. Date Mo Da Yr 02/14/2006	B. Time (24 Hr. Clock) 1005	

Section IV—Automated System Data

19. Type of Inspection (activity code) E01	20. Event Number 4476283	21. Primary or Mill	
22. Signature Signature			23. AR Number 23799

MSHA Form 7000-3, Mar 85 (revised) In accordance with the provisions of the Small Business Regulatory Enforcement Fairness Act of 1996, the Small Business Administration has established a National Small Business and Agriculture Regulatory Ombudsman and 10 Regional Fairness Boards to receive comments from small businesses about federal agency enforcement actions. The Ombudsman annually evaluates enforcement activities and rates each agency's responsiveness to small business. If you wish to comment on the enforcement actions of MSHA, you may call 1-888-REG-FAIR (1-888-734-3247), or write the Ombudsman at Small Business Administration, Office of the National Ombudsman, 409 3rd Street, SW MC 2120, Washington, DC 20416. Please note, however, that your right to file a comment with the Ombudsman is in addition to any other rights you may have, including the right to contest citations and proposed penalties and obtain a hearing before the Federal Mine Safety and Health Review Commission.

4

Mine Citation/Order

U.S. Department of Labor
Mine Safety and Health Administration 4-18-06 Assm

-Violation Data

1. Mo Da Yr 02/27/2006	2. Time (24 Hr. Clock) 1030		3. Citation/ Order Number 7282795
4. Served To Jim Pruitt, Safety		5. Operator GENWAL RESOURCES INC	
6. Mine CRANDALL CANYON MINE		7. Mine ID 42-01715 (Contractor)	8a. Written Notice (103g) ☐

8. Condition or Practice

At the South Mains section oil storage area, there were 3, 5 gallon cans of gear grease half full without the lids put in place. Also there were 4 tubes of grease found on the mine floor. All lubricating oil and grease shall be kept in fire proof, closed metal containers.

See Continuation Form (MSHA Form 7000-3a) ☐

9. Violation	A. Health ☐ Safety ☑ Other ☐	B. Section of Act	C. Part/Section of Title 30 CFR 75.1104

Section II--Inspector's Evaluation

10. Gravity:
A. Injury or Illness (has) (is): No Likelihood ☐ Unlikely ☑ Reasonably Likely ☐ Highly Likely ☐ Occurred ☐
Injury or illness could reasonably be expected to be: No Lost Workdays ☑ Lost Workdays Or Restricted Duty ☐ Permanently Disabling ☐ Fatal ☐
C. Significant and Substantial: Yes ☐ No ☑
D. Number of Persons Affected: 007

11. Negligence (check one) A. None ☐ B. Low ☐ C. Moderate ☑ D. High ☐ E. Reckless Disregard ☐

12. Type of Action 104(a)
13. Type of Issuance (check one) Citation ☑ Order ☐ Safeguard ☐

14. Initial Action A. Citation ☐ B. Order ☐ C. Safeguard ☐ D. Written Notice ☐
E. Citation/ Order Number
F. Dated Mo Da Yr

15. Area or Equipment

16. Termination Due	A. Date Mo Da Yr 02/27/2006	B. Time (24 Hr. Clock) 1040	

Section III--Termination Action

17. Action to Terminate Materials were picked up and put in closed metal containers.

18. Terminated	A. Date Mo Da Yr 02/27/2006	B. Time (24 Hr. Clock 1040	

Section IV--Automated System Data

19. Type of Inspection (activity code) E01	20. Event Number 4476283	21. Primary or Mill	
22. Signatu[redacted]			23. AR Number 23799

Signature

HA Form 7000-3, Mar 85 (revised) In accordance with the provisions of the Small Business Regulatory Enforcement Fairness Act of 1996, the Small Business Administration has established a National Small Business and Agriculture Regulatory Ombudsman and 10 Regional Fairness Boards to receive comments from small businesses about federal agency enforcement actions. The Ombudsman annually evaluates enforcement activities and rates each agency's responsiveness to small business. If you wish to comment on the enforcement actions of MSHA, you may call 1-888-REG-FAIR (1-888-734-3247), or write the Ombudsman at Small Business Administration, Office of the National Ombudsman, 409 3rd Street, SW MC 2120, Washington, DC 20416. Please note, however, that your right to file a comment with the Ombudsman is in addition to any other rights you may have, including the right to contest citations and proposed penalties and obtain a hearing before the Federal Mine Safety and Health Review Commission.

12

Mine Citation/Order

U.S. Department of Labor
Mine Safety and Health Administration 4-18-06 Assm

I–Violation Data

.e Mo Da Yr 03/23/2006	2. Time (24 Hr. Clock) 1750		3. Citation/ Order Number 7282797
4. Served To Clark Atwood, Safety		5. Operator GENWAL RESOURCES INC	
6. Mine CRANDALL CANYON MINE		7. Mine ID 42-01715 (Contractor)	8a. Written Notice (103g)

8. Condition or Practice

Accumulations of 11 Aersol spray cans were present in the bed of the #15-2 Truck parked in the underground parking area. 4 cans contact cleaner, 1 can red paint, 3 cans liquid wrench, 1 can lube eze, 1 can silicone lubricant and 1 can safety solvent.

See Continuation Form (MSHA Form 7000-3a)

9. Violation	A. Health Safety ☑ Other	B. Section of Act	C. Part/Section of Title 30 CFR 75.400

Section II–Inspector's Evaluation

10. Gravity:
A. Injury or Illness (has) (is): No Likelihood ☐ Unlikely ☑ Reasonably Likely ☐ Highly Likely ☐ Occurred ☐
. Injury or illness could reasonably be expected to be: No Lost Workdays ☑ Lost Workdays Or Restricted Duty ☐ Permanently Disabling ☐ Fatal ☐
C. Significant and Substantial: Yes ☐ No ☑ D. Number of Persons Affected: 001

11. Negligence (check one) A. None ☐ B. Low ☐ C. Moderate ☑ D. High ☐ E. Reckless Disregard ☐

12. Type of Action 104(a) 13. Type of Issuance (check one) Citation ☑ Order ☐ Safeguard ☐

14. Initial Action A. Citation ☐ B. Order ☐ C. Safeguard ☐ D. Written Notice ☐ E. Citation/ Order Number F. Dated Mo Da Yr

15. Area or Equipment

16. Termination Due	A. Date Mo Da Yr 03/23/2006	B. Time (24 Hr. Clock) 1805	

Section III–Termination Action

17. Action to Terminate The cans was removed from the underground parking area.

18. Terminated	A. Date Mo Da Yr 03/23/2006	B. Time (24 Hr. Clock 1805	

Section IV–Automated System Data

19. Type of Inspection (activity code) E01	20. Event Number 4476283	21. Primary or Mill	
22. Signature Signature			23. AR Number 23799

HA Form 7000-3, Mar 85 (revised) In accordance with the provisions of the Small Business Regulatory Enforcement Fairness Act of 1996, the Small Business Administration has ablished a National Small Business and Agriculture Regulatory Ombudsman and 10 Regional Fairness Boards to receive comments from small businesses about federal agency enforcement actions. The Ombudsman annually evaluates enforcement activities and rates each agency's responsiveness to small business. If you wish to comment on the enforcement actions of MSHA, you may call 1-888-REG-FAIR (1-888-734-3247), or write the Ombudsman at Small Business Administration, Office of the National Ombudsman, 409 3rd Street, SW MC 2120, Washington, DC 20416. Please note, however, that your right to file a comment with the Ombudsman is in addition to any other rights you may have, including the right to contest citations and proposed penalties and obtain a hearing before the Federal Mine Safety and Health Review Commission.

13

Mine Citation/Order

U.S. Department of Labor
Mine Safety and Health Administration

4-1326-Assm

Section I--Violation Data

1. Date Mo Da Yr	2. Time (24 Hr. Clock)		3. Citation/ Order Number
03/26/2006	0100		7282798

4. Served To	5. Operator
Steve Radmall, Safety	GENWAL RESOURCES INC
6. Mine	7. Mine ID 42-01715 (Contractor)
CRANDALL CANYON MINE	8a. Written Notice (103g)

8. Condition or Practice

In the South Mains section, MMU-009, at the sections feeder breaker, accumulations of dry to damp loose coal were present just inby the feeder breaker on the right and left side roadways coming to the feeder breaker and on the left side of the feeder breaker. The accumulations measured 21 feet in length, 13 inches to 3 1/2 feet deep and 9 feet wide on the left side. 13 inches deep, 10 feet wide and 25 feet in length on the right side. No mining activities, no CH4 detected and no iginition source found at time of citation.

See Continuation Form (MSHA Form 7000-3a) ☐

9. Violation	A. Health ☐ Safety ☑ Other ☐	B. Section of Act	C. Part/Section of Title 30 CFR 75.400

Section II--Inspector's Evaluation

10. Gravity:
A. Injury or Illness (has) (is): No Likelihood ☐ Unlikely ☑ Reasonably Likely ☐ Highly Likely ☐ Occurred ☐
B. Injury or illness could reasonably be expected to be: No Lost Workdays ☑ Lost Workdays Or Restricted Duty ☐ Permanently Disabling ☐ Fatal ☐
C. Significant and Substantial: Yes ☐ No ☑
D. Number of Persons Affected: 002

11. Negligence (check one) A. None ☐ B. Low ☐ C. Moderate ☑ D. High ☐ E. Reckless Disregard ☐

12. Type of Action 104(a)	13. Type of Issuance (check one) Citation ☑ Order ☐ Safeguard ☐		
14. Initial Action A. Citation ☐ B. Order ☐ C. Safeguard ☐ D. Written Notice ☐		E. Citation/ Order Number	F. Dated Mo Da Yr

15. Area or Equipment

16. Termination Due	A. Date Mo Da Yr 03/26/2006	B. Time (24 Hr. Clock) 0800	

Section III--Termination Action

17. Action to Terminate

18. Terminated	A. Date Mo Da Yr	B. Time (24 Hr. Clock	

Section IV--Automated System Data

19. Type of Inspection (activity code) E01	20. Event Number 4476283	21. Primary or Mill	
22. Signature Signature			23. AR Number 23799

MSHA Form 7000-3, Mar 85 (Revised) ... provisions of the Small Business Regulatory Enforcement Fairness Act of 1996, the Small Business Administration has established a National Small Business and Agriculture Regulatory Ombudsman and 10 Regional Fairness Boards to receive comments from small businesses about federal agency enforcement actions. The Ombudsman annually evaluates enforcement activities and rates each agency's responsiveness to small business. If you wish to comment on the enforcement actions of MSHA, you may call 1-888-REG-FAIR (1-888-734-3247), or write the Ombudsman at Small Business Administration, Office of the National Ombudsman, 409 3rd Street, SW MC 2120, Washington, DC 20416. Please note, however, that your right to file a comment with the Ombudsman is in addition to any other rights you may have, including the right to contest citations and proposed penalties and obtain a hearing before the Federal Mine Safety and Health Review Commission.

Mine Citation/Order Continuation

U.S. Department of Labor
Mine Safety and Health Administration

Subsequent Action/Continuation Data

Subsequent Action 1a. Continuation	2. Dated (Original Issue) Mo Da Yr	3. Citation/ Order Number
☑	03/26/2006	7282798 - 01

4. Served To	5. Operator
Steve Radmall, Safety	GENWAL RESOURCES INC (Contractor)
6. Mine	7. Mine ID
CRANDALL CANYON MINE	42-01715

Section II--Justification for Action

Accumulations cleaned and area rock dusted.

See Continuation Form ☐

Section III--Subsequent Action Taken

8. Extended To	A. Date Mo Da Yr	B. Time (24 Hr. Clock)	☐ C. Vacated	☑ D. Terminated	☐ E. Modified

Section IV--Inspection Data

9. Type of Inspection	10. Event Number			
E01	4476283			
Signature	AR Number	12. Date Mo Da Yr	13. Time (24 Hr. Clock)	
	23799	03/27/2006	0830	

MSHA Form 7000-3a, Mar 85 (revised)

Mine Citation/Order

U.S. Department of Labor
Mine Safety and Health Administration

4-18-06 455pm

Section I–Violation Data

te Mo Da Yr: 03/27/2006	2. Time (24 Hr. Clock): 1110		3. Citation/ Order Number: 7282799
4. Served To: Jim Pruitt, Safety		5. Operator: GENWAL RESOURCES INC	
6. Mine: CRANDALL CANYON MINE		7. Mine ID: 42-01715 (Contractor)	8a. Written Notice (103g)

8. Condition or Practice

Two five gallon safety cans (portable containers) was not labeled or marked to identify the contents. Both cans were full. One can was at the fuel storage area. One can was at the truck load out belt. When checked, the contents were found to be diesel fuel.

See Continuation Form (MSHA Form 7000-3a)

9. Violation	A. Health / Safety ☑ / Other	B. Section of Act	C. Part/Section of Title 30 CFR: 47.44(b)

Section II–Inspector's Evaluation

10. Gravity:
A. Injury or Illness (has) (is): No Likelihood ☐ Unlikely ☑ Reasonably Likely ☐ Highly Likely ☐ Occurred ☐
B. Injury or illness could reasonably be expected to be: No Lost Workdays ☑ Lost Workdays Or Restricted Duty ☐ Permanently Disabling ☐ Fatal ☐
C. Significant and Substantial: Yes ☐ No ☑ D. Number of Persons Affected: 001

11. Negligence (check one) A. None ☐ B. Low ☐ C. Moderate ☑ D. High ☐ E. Reckless Disregard ☐

12. Type of Action: 104(a)	13. Type of Issuance (check one) Citation ☑ Order ☐ Safeguard ☐	
14. Initial Action A. Citation ☐ B. Order ☐ C. Safeguard ☐ D. Written Notice ☐	E. Citation/ Order Number	F. Dated Mo Da Yr

15. Area or Equipment

16. Termination Due	A. Date Mo Da Yr: 03/27/2006	B. Time (24 Hr. Clock): 1120	

Section III–Termination Action

17. Action to Terminate: The safety cans was marked and identified.

18. Terminated	A. Date Mo Da Yr: 03/27/2006	B. Time (24 Hr. Clock): 1120	

Section IV–Automated System Data

19. Type of Inspection (activity code): E01	20. Event Number: 4476283	21. Primary or Mill	
22. Signatur[e] Signature			23. AR Number: 23799

SHA Form 7000-3, Mar 85 (revised) In accordance with the provisions of the Small Business Regulatory Enforcement Fairness Act of 1996, the Small Business Administration has ablished a National Small Business and Agriculture Regulatory Ombudsman and 10 Regional Fairness Boards to receive comments from small businesses about federal agency enforcement actions. The Ombudsman annually evaluates enforcement activities and rates each agency's responsiveness to small business. If you wish to comment on the enforcement actions of MSHA, you may call 1-888-REG-FAIR (1-888-734-3247), or write the Ombudsman at Small Business Administration, Office of the National Ombudsman, 409 3rd Street, SW MC 2120, Washington, DC 20416. Please note, however, that your right to file a comment with the Ombudsman is in addition to any other rights you may have, including the right to contest citations and proposed penalties and obtain a hearing before the Federal Mine Safety and Health Review Commission.

16

MSHA Form 7000-10I, June 93 (revised)

DAILY COVER SHEET

Date 2-14-06 Event No. 4476283

Arrived at the Mine _____ Departed from the Mine _____

List Records Books Checked Pre-Shift

Belts

Accompanied By: Company Representative

Steve Radmall

Miners Representative

None

AREAS OF INSPECTION ACTIVITY:

EOI - Crandall

Canyon Mine

Belts

Pre-Insp Meeting

Inspector's Initials TA TT 2-27-06

Supervisor's Initials and Date _____ Page No. 1

*U.S. Government Printing Office: 1997 - 508-470

MSHA Form 7000-10K, June 93 (revised)

Date 2-14-06

Travel To So. Mains

Belt Line -

Citation # 7282793

0835 hr 75.1725(a)

Between # 253 + #6-7

X-cuts of #1 Belt in So.

Mains on the off walk

way side 2 bottom roller

brackets were cut into

allowing belt to ride

over to walkway side

+ against the belt

structure in 5 to 6

spots & caused the

structure to be warm

to hot to the touch,

causing friction &

potential fire hazard.

Inspector's Initials TA

Supervisor's Initials and Date OTT 2-27-06 Page No. 2

*U.S.GPO: 2004 - 642 - 912

MSHA Form 7000-10K, June 93 (revised)

Date 2-14-06

[redacted] Belt was shut

off until repairs are

made -

6 Exposed - Mod / Neg

Lost Days - R/Likely

"Root Cause" Reviewed

with Steve Radmall -

Exam + Lack of incentive

to correct condition -

So. Mains crew working

on this condition -

Condition on remainder

of belt, Drive Area,

Guarding, Fire Protection

Sensors, Dist. Box # 4A,

Roof - Ribs - Rock Dust.

Gases - D.T.I. OK

#1 Belt is approximately

Inspector's Initials TA

Supervisor's Initials and Date OTT 2-27-06 Page No. 3

*U.S.GPO: 2004 - 642 - 912

MSHA Form 7000-10K, June 93 (revised)

Date 2-14-06

3200' LONG

CITATION # 7282794

0915 HR. 75.400

FLOAT COAL DUST WERE PRESENT ON THE BELT STRUCTURE, ELECTRICAL DIST. BOX & DRIVE MOTORS AT #2 DRIVE AREA, X-CUT #18 IN THE SO. MAINS. 6 EXPOSED - MOD/NEG LOST DAYS - R/LIKELY - POWER ENERGIZED & BELT WAS RUNNING BEFORE SHUTING BELT OFF ON PREVIOUS CITATION - SO. MAINS CREW ALSO WORKING ON THIS CONDITION

Inspector's Initials TA

Supervisor's Initials and Date OTF 2-27-06 Page No. 4

*U.S.GPO: 2004 - 642 - 912

MSHA Form 7000-10K, June 93 (revised)

Date 2-14-06

REMAINDER OF #2 BELT, GUARDING, FIRE PROTECTION, ROOF - RIBS - GASES - D.T.I. OK. #2 BELT OF SO. MAINS IS APPROXIMATELY 200' LONG

CITATION # 7282794 ABATED AT 1005 HR. DRIVE AREA WASHED & DUSTED -

CHECK PC # 13 IN SO. MAINS - OK. FIRE PROTECTION OK

CITATION # 7282793 ABATED AT 1030 HR -

Inspector's Initials TA

Supervisor's Initials and Date OTF 2-27-06 Page No. 5

*U.S.GPO: 2004 - 642 - 912

MSHA Form 7000-10K, June 93 (revised)

Date 2-14-06

BOTTOM ROLLERS REPAIRED [redacted] BELT MOVED FROM COMING INTO CONTACT WITH BELT STRUCTURE.

CHECK #1 COMPRESSOR STATION AT X-CUT # 30 MAINS - SENSORS, VENTED, FIRE PROTECTION, GASES D.T.I. OK AT TIME OF MY EXAM.

TRAVEL TO SAFETY OFFICE - HAD PRE-INSP MEETING WITH (b) (7)(C)

Inspector's Initials TA

Supervisor's Initials and Date OTF 2-27-06 Page No. 6

*U.S.GPO: 2004 - 642 - 912

MSHA Form 7000-10K, June 93 (revised)

Date 2-14-06

REVIEWED PREVIOUS INSP. CONCERNS. ALSO INFORMED BY: (b) (7)(C)) THAT AT THE So. CRANDALL CANYON MINE, ALTHOUGH So. CRANDALL IS UNDER A DIFFERENT EVENT # THAT THE So. MAINS, So. CRANDALL MMU-002 WILL BE IDLE BY THE END OF THIS WEEK.~

ALSO INFORMED THAT C.M. (b) (7)(C) CHECKED DIESEL EQUIP AT CRANDALL CANYON ON 1-23-06 & 1-26-06 ON A DIFFERENT EVENT

Inspector's Initials TA

Supervisor's Initials and Date TF 2-17-06 Page No. 6 7

*U.S.GPO: 2004 - 642 - 912

MSHA Form 7000-10K, June 93 (revised)

Date 2-14-06

BECAUSE HE DID NOT KNOW I HAD MY EOI EVENT ALREADY OPEN.~ I WILL STILL COUNT THAT INSP ON DIESEL EQUIP. ON MY EOI. (b) (7)(C) EVENT # 4474126

TRAINING RECORDS FOR SURFACE & UNDERGROUND~ CERTIFIED & QUALIFIED PERSONS, SURFACE & UNDERGROUND, ALL REVIEWED ON 2-9-06

Inspector's Initials TA

Supervisor's Initials and Date TF 2-27-06 Page No. 8

*U.S.GPO: 2004 - 642 - 912

MSHA Form 7000-10K, June 93 (revised)

Date 2-27-06

OBSERVED RB'S DRILLING TEST HOLES - OK AT TIME OF MY EXAM -

#12-9 S/C PERMISS OK AT TIME OF MY EXAM.

CHECK SECTION OIL STORAGE AREA -

1030 hr - 75.1104 CITATION # 7282795 AT THE OIL STORAGE AREA THERE WERE 3 5 GALLON CANS OF GEAR GREASE 1/2 FULL WITH-OUT THE LIDS ON THE CANS, ALSO 4 TUBES OF GREASE WERE ON THE MINE FLOOR -

Inspector's Initials TA

Supervisor's Initials and Date AOF 5306 Page No. 4

*U.S.GPO: 2004 - 642 - 912

MSHA Form 7000-10K, June 93 (revised)

Date 2-27-06

ALL LUBRICATING OIL & GREASE SHALL BE KEPT IN FIRE PROOF, CLOSED METAL CONTAINERS.

7 EXPOSED - NO LOST DAYS MOD/NEG - UNLIKELY - FIRE PROTECTION IN PLACE NO ELECTRICAL SOURCE IN AREA - NO CHG - ROOT CAUSE - EXAM & LACK OF INCENTIVE TO CORRECT - CITATION ABATED AT 1040 hr. MATERIAL PICKED UP & PUT IN METAL CONTAINER REMAINDER OF OIL STORAGE AREA OK AT TIME OF MY EXAM.

Inspector's Initials TA

Supervisor's Initials and Date AOF 5306 Page No. 5

*U.S.GPO: 2004 - 642 - 912

MSHA Form 7000-10K, June 93 (revised)

Date 2-27-06

SECTION PC - OK. FIRE PROTECTION OK AT TIME OF MY EXAM.

SECTION FEEDER BREAKER & SECTION ROCK DUSTER OK. FIRE PROTECTION OK AT TIME OF MY EXAM.

SECTION PORTABLE WELDER - OK

TRAVEL TO SAFETY OFFICE.

Inspector's Initials TA

Supervisor's Initials and Date AOF 5306 Page No. 6

*U.S.GPO: 2004 - 642 - 912

MSHA Form 7000-10I, June 93 (revised)

DAILY COVER SHEET

Date 2-16-17 Event No. 4436283

Arrived at the Mine ___ Departed from the Mine ___

List Records Books Checked PRE-SHIFT + BELTS

Accompanied By: Company Representative

STEVE RADMALL - SAFETY

Miners Representative

NONE

AREAS OF INSPECTION ACTIVITY:

E01 - CRANDALL CANYON

BELTS

MEET WITH (b) (7)(C)

Inspector's Initials TA

Supervisor's Initials and Date TF 2-27-06 Page No. 1

*U.S. Government Printing Office: 1997 - 508-470

MSHA Form 7000-10K, June 93 (revised)

Date 2-16-06

TRAVEL TO #4 BELT TAIL PIECE OF THE MAINS WEST

WALK #4 BELT - (3000' LONG) BELT LINE, SENSORS, FIRE PROTECTION, TAKE-UP GUARDING, COMMUNICATIONS DRIVE AREA, ROOF-RIBS, ROCK DUST, GASES, N.J.T. ALL APPEARED TO BE OK AT TIME OF MY INSP.

#19 TRANSFORMER (PC) FOR #4 DRIVE - OK FIRE PROTECTION, SENSORS, ROOF-RIBS-ROCK DUST, GASES, N.J.T OK AT

Inspector's Initials TA

Supervisor's Initials and Date TF 2-27-06 Page No. 2

*U.S.GPO: 2004 - 642 - 912

MSHA Form 7000-10K, June 93 (revised)

Date 2-16-06

TIME OF MY INSP.

WALK #3 (MAINS WEST) BELT - (4000' LONG) BELT LINE, FIRE PROTECTION, SENSORS (CO) TAKE-UP, COMMUNICATIONS, DRIVE AREA, ROOF-RIBS-ROCK DUST-GASES-N.J.T ALL APPEARED TO BE OK AT TIME OF MY EXAM.

(CSE) CHECK SCSR CACHE BETWEEN # 49 & 50 X-CUT IN BELT LINE - SCSR APPEARED TO BE OK AT TIME OF MY EXAM - THE #'S ARE AS FOLLOWS (b) (7)(E) SCSR's

Inspector's Initials TA

Supervisor's Initials and Date TF 2-27-06 Page No. 3

*U.S.GPO: 2004 - 642 - 912

MSHA Form 7000-10K, June 93 (revised)

Date 2-16-06

#49988 - 2/97

50020 - "

50056 - "

50071 - "

50082 - "

50087 - "

62409 - 8-98-

90-DAY CHECK 2-06

CHECK #5 PC T#9 PC ALONG #3 BELT- OK. FIRE PROTECTION - ROOF RIBS- ROCK DUST- GASES CO SENSORS, D.T.I OK AT TIME OF MY EXAM

WALK #2 BELT (3700' LONG) BELT LINE, DRIVE AREA, GUARDING, FIRE PROTECTION

Inspector's Initials TA

Supervisor's Initials and Date TT 2-27-06 Page No. 4

*U.S.GPO: 2004 - 642 - 912

MSHA Form 7000-10K, June 93 (revised)

Date 2-16-06

CO SENSORS, TAKE-UP COMMUNICATIONS ROOF RIBS, ROCK DUST- GASES D.T.I OK AT TIME OF MY EXAM.

PC #8 T#4 ALONG #1 BELT OF THE MAINS- O.K. CO SENSORS, FIRE PROTECTION, ROOF- RIBS- ROCK DUST- GASES D.T.I OK AT TIME OF MY EXAM.

TRAVEL TO SAFETY OFFICE REVIEWED TODAYS JASP. WITH (b) (7)(C) - NO NEGATIVE COMMENTS.

Inspector's Initials TA

Supervisor's Initials and Date TT 2-27-06 Page No. 5

*U.S.GPO: 2004 - 642 - 912

MSHA Form 7000-10I, June 93 (revised)

DAILY COVER SHEET

Date 2-22-06 Event No. 4476263

Arrived at the Mine ____ Departed from the Mine ____

List Records Books Checked

PRE-SHIFT

Accompanied By: Company Representative

STEVE RADMALL, SAFETY

Miners Representative

NONE

AREAS OF INSPECTION ACTIVITY:

EOI - GRANDAD CANYON

MEET WITH STEVE RADMALL SAFETY -

REVIEWED THE UNDER GROUND VENTILATION & ROOF CONTROL PLANS

Inspector's Initials TA 2-27-06

Supervisor's Initials and Date ____ Page No. 1

*U.S. Government Printing Office: 1997 - 508-470

MSHA Form 7000-10K, June 93 (revised)

Date 2-22-06

AT MINE SITE & ALSO DURING REVIEW OF MINE FILE.

FAN BOOK & WEEKLY BOOK - REVIEWED

SMOKER BOOK REVIEWED

90 DAY ICSIR RECORD REVIEWED -

REVIEWED MINE & ELECTRICAL MAPS - ALL RECORDS & MAPS & POSTINGS REVIEWED APPEARED TO BE IN ORDER AT TIME OF MY EXAM. -

WALK #1 BELT OF MAIN NORTH, PORTAL TO TAIL PIECE - APPROXIMATELY 3000' LONG.

Inspector's Initials TA

Supervisor's Initials and Date OTF 2-27-06 Page No. 2

*U.S.GPO: 2004 - 642 - 912

MSHA Form 7000-10K, June 93 (revised)

Date 2-22-06

BELT LINE, FIRE PROTECTION, SENSORS, ROOF - RIBS - ROCK DUST - GASES - D.T.I.T OK AT TIME OF MY EXAM.

CHECK SEALS (15) ALONG NO. MAINS INTAKE - OK. NO HAZARDS OBSERVED - ROOF RIBS - ROCK DUST - GASES - D.T.I.T OK AT TIME OF MY EXAM.

NO. MAINS INTAKE ENTRY (PRIMARY) - OK. NO HAZARDS OBSERVED - CO SENSORS IN PLACE. ROOF RIBS - ROCK DUST - GASES D.T.I.T OK AT TIME OF MY EXAM.

Inspector's Initials TA

Supervisor's Initials and Date OTF 2-27-06 Page No. 3

*U.S.GPO: 2004 - 642 - 912

MSHA Form 7000-10K, June 93 (revised)

Date 2-22-06

MAIN WEST INTAKE ENTRY (PRIMARY) TO HEAD OF SO. MAINS OK. SENSORS (CO) IN PLACE- NO HAZARDS OBSERVED- ROOF- RIBS ROCK DUST- GASES- A.T.J OK AT TIME OF MY EXAM. MAIN WEST MAIN PUMP AREA, X-CUT #45- OK. FIRE PROTECTION CO SENSORS- OK. NO HAZARDS OBSERVED- A.T.J. OK.

2 SEALS, X-CUT #45-46- MAIN WEST- OK. GASES- A.T.J OK AT

Inspector's Initials TA

Supervisor's Initials and Date TTF 2-27-06 Page No. 4

*U.S.GPO: 2004 - 642 - 912

MSHA Form 7000-10K, June 93 (revised)

Date 2-22-06

TIME OF MY EXAM.

1 SEAL, X-CUT #67 +

1 " X-CUT 107 OF MAIN WEST- OK. NO HAZARDS OBSERVED- GASES- A.T.J OK.

INTAKE ENTRY OF MAIN WEST FROM HEAD OF SO. MAINS TO MAIN WEST SEALS OK. NO HAZARDS OBSERVED- GASES- ROOF RIBS- ROCK DUST- A.T.J OK AT TIME OF MY EXAM.

MAIN WEST SEALS (5) OK. NO HAZARDS OBSERVED

Inspector's Initials TA

Supervisor's Initials and Date TTF 2-27-06 Page No. 5

* U.S. G.P.O.:2001 709-135

MSHA Form 7000-10K, June 93 (revised)

Date 2-22-06

GASES- A.T.J. OK.

RETURN ENTRY OF MAIN WEST- FROM M. WEST SEALS TO HEAD OF SO. MAINS- OK. NO HAZARDS OBSERVED- A.T.J OK. AT TIME OF MY EXAM.

1ST BK. SEALS (3) OFF M. WEST RETURN ENTRY- OK- NO HAZARDS OBSERVED- GASES- A.T.J OK.

INTAKE ENTRY (PRIMARY) OF SO. MAINS- OK. NO HAZARDS OBSERVED.

Inspector's Initials TA

Supervisor's Initials and Date TTF 2-27-06 Page No. 6

* U.S. G.P.O.:2001 709-135

MSHA Form 7000-10K, June 93 (revised)

Date 2-22-06

GASES - O.T.I - ROCK DUST - ROOF - RIBS - OK AT TIME OF MY EXAM

WALK PILLAR LINE WITH [redacted] (b) (7)(C) WHILE CONDUCTING ON-SHIFT EXAM. NO HAZARDS OR IMMINENT DANGER OBSERVED AT TIME OF EXAM.

OBSERVED WORK PRACTICE TRAINING CYCLE OF CREW. APPEARED TO BE OK AT TIME OF MY EXAM.

CHECK PERMISSION #7

Inspector's Initials TA

Supervisor's Initials and Date TVF 2-27-06 Page No. 7

* U.S. G.P.O.:2001 709-135

MSHA Form 7000-10K, June 93 (revised)

Date 2-22-06

MRS - OK.

CHECK #2 BATTERY SCOOP & CHARGING STATION FOR #2 SCOOP. OK. SENSORS & FIRE PROTECTION OK.

GENERAL ROOF & RIB CONDITIONS & SUPPLE-MENTAL ROOF SUPPORT MATERIALS OK AT TIME OF MY EXAM.

FIRST AID, ESCAPEWAY MAP, DRINKING WATER, TOILET, COMMUNICATIONS IN PLACE AT TIME OF MY EXAM. TRAVEL TO SAFETY OFFICE

Inspector's Initials TA

Supervisor's Initials and Date TVF 2-27-06 Page No. 8

* U.S. G.P.O.:2001 709-135

MSHA Form 7000-10I, June 93 (revised)

DAILY COVER SHEET

Date 2-27-06 Event No. 4476283

Arrived at the Mine _____ Departed from the Mine _____

List Records Books Checked

PRE-SHIFT -

Accompanied By: Company Representative

JIM PRUITT, SAFETY

Miners Representative

NONE

AREAS OF INSPECTION ACTIVITY

E01 - GRANDALL CANYON
SO. MAINS
MMU - 009

MEET WITH JIM PRUITT, SAFETY -

OBSERVED SMOKER CHECK OF DAY SHIFT - OK

Inspector's Initials TA

Supervisor's Initials and Date RT 5-3-06 Page No. 1

*U.S. Government Printing Office: 1997 - 508-470

MSHA Form 7000-10K, June 93 (revised)

Date 2-27-06

TRAVEL TO HEAD OF SO. MAINS -
- WALK SECONDARY ESCAPEWAY (RETURN)
ENTRY OF SO. MAINS - OK. NO HAZARDS OBSERVED ROOF - RIBS. ROCK DUST GASES - O.T.E OK AT TIME OF my EXAM.
CHECKED THE FOLLOWING SEALS ALONG RETURN ENTRY OF SO. MAINS -
8TH WEST SEALS (3)
9TH " " (3)
10TH " " (3)
ALL SEALS OK. NO HAZARDS OBSERVED - ROOF - RIBS - ROCK DUST - GASES. O.T.E

Inspector's Initials TA

Supervisor's Initials and Date RT 5-3-06 Page No. 2

*U.S.GPO: 2004 - 642 - 912

MSHA Form 7000-10K, June 93 (revised)

Date 2-27-06

OK AT TIME OF MY INSP.

CHECK PERMISS ON II 9 S/C - OK.
#8 MBS - #5 MBS & #6 MBS - PERMISS OK AT TIME OF MY EXAM

#8 S/C - OK AT TIME OF MY EXAM

CHECK # 13-1 RB PERMISS OK - RB ONLY BEING USED FOR TEST HOLES AT THIS TIME - DEVELOPMENT PHASE IS COMPLETE - SECTION PULLING PILLARS

Inspector's Initials TA

Supervisor's Initials and Date RT 5-3-06 Page No. 3

*U.S.GPO: 2004 - 642 - 912

Respirable Dust Sampling and Monitoring Data

U.S. Department of Labor
Mine Safety and Health Administration

1. Type of Inspection: ☒ Regular ☒ Technical ☐ Monitoring — EOI
2. Date: 3-22-06
3. Field Office Code: 20905-01
4. Mine I. D.: 42-01715
5. Mine Name: CRANDALL CANYON MINE
6. Company Name: GENWAL RESOURCES, INC
7. MMU/DA/SA: 009
8. Times Entity/Mine Cited for Excessive Dust Last 12 Months:
9. AR Signature: Signature — AR Number: 23799
10. Supervisor Signature: Signature

11. Type Mining System:
☐ A. Longwall — NA
Cut Sequence: ☐ i. Tail-Head ☐ ii. Head-Tail NA ☐ iii. Both
☒ B. Continuous: ☒ I. Ripper ☐ II. Auger ☐ III. Borer
☐ C. Conventional
Other (specify)

12. Mining Ht.: 90 in.
Inches of Rock Mined:

13. Remote Operation of Miner?: ☒ Yes ☐ No

14. Type of Mining: ☐ I. Development ☒ II. Retreating

15. Physical Conditions:
Face Area: ☐ Wet ☒ Damp ☒ Dry
Roadways: ☒ Wet ☐ Damp ☐ Dry ☐ Compacted

16. Type of Haulage Equipment:
☒ Electric ☐ Battery ☐ Diesel ☐ Other (specify)

17. Roof Bolter Type: Number of Bolters
☐ I. Twin Head NA
☐ II. Single Head
☐ III. Integral

A. Ventilation
I. Operates on Separate Split of Air: ☐ Yes ☒ No
II. Operates on Return-Side of DO: ☐ Yes ☒ No

B. Is Roof Bolter DA Established? ☐ Yes ☐ No
C. Type of Dust Control: NA ☐ I. Wet Head ☐ II. Dust Collector

18. Dust Control Parameters - Ventilation System:

A. Method of Face Ventilation:
☐ I. Blowing
☒ II. Exhausting
☐ III. Both

B. Face Ventilation Device:
☒ I. Curtain
☐ II. Tubing
☐ III. Both

C. Line Curtain/Tubing Distance: NA ft.
D. Is Face Area Ventilated with Belt Air? ☐ Yes ☒ No
E. If, Yes, Quantity in Belt Entry: _____ cfm

F. Air Quantity:

Longwall (Between 50 and 100 feet of Headgate and Tailgate)

Quantity (Q), cfm

Location	Observed	
Headgate	NA	
Tailgate		

Velocity (V), fpm

Location	Plan	Observed	
Headgate	NA		
Tailgate			

Continuous/Conventional/Handloading

1ST READING

	Plan	Observed					
Face (Q)	15,000	18,742					
MEAV (V)							
Scrubber*							

TO END OF 2 LINE

MEAV (V) - for exhausting only
* - operational cfm only

27

19. Dust Control Parameters - Water Spray System:

Location	Number of Operating Sprays			Operating PSI		
	Plan	Observed		Plan	Observed	
So. MAINS PILLARS	46	46		75	135	
ATOMIZER SPRAYS	2	2		40-60	55	

Sprays Located per Plan: Yes ☒ No ☐

Sprays Angled per Plan: Yes ☒ No ☐

20. Auxilliary Controls:

Scrubber Frequency Screen Checked: _____

Frequency Ductwork Checked: _____

Fan Spray Sprays Located per Plan ☐ Yes ☐ No Sprays Angled per Plan ☐ Yes ☐ No

Work Practices Describe: _____

Enclosures Describe: _____

Other (Wetting Agents; Wetting face, supports and roadways; ect.) Describe: _____

21. Are Approved Respirators Being Worn?: ☐ Yes ☒ No If Yes, By Whom: _____

Make: _____ Model: _____

22. Do Miners Work Downwind of the Longwall Shearer?: NA ☐ Always ☐ Part of the Shift ☐ Never

23. Was the Operator Cited for Violating the Dust Control Parameters of the Ventilation Plan?: ☐ Yes ☒ No

If Yes, specify: _____

24. Were Dust Control Parameters Changed During Sampling?: ☐ Yes ☒ No If Yes, specify: _____

25. Production (tons): At Time of Sampling: 299 tons At Time of Monitoring: _____ tons During Last 30 Shifts: 740 tons

26. Bi-monthly Sampling Conducted By: ☒ Operator ☐ Contractor Contractor I.D.: _____

27. Sampling Equipment: Provided By ☒ Operator ☐ Contractor Calibrated and Maintained By ☒ Operator ☐ Contractor

28. Inspector Recommendations and Comments: _____

USE SPACE BELOW FOR SKETCHES OR OTHER INFORMATION

28

Price #1 Report
Farmer
Anderson

**0905-0001
REPORT NO: MSD014

RESPIRABLE DUST SAMPLING INSPECTION RESULTS

MARCH 24, 2006

McA File
03/27/06

MINE ID NUMBER

42-01715

MINE NAME - CRANDALL CANYON MINE

COMPANY NAME - GENWAL RESOURCES INC

ENTITY ID 009-0

SAMPLING DATE 03-22-2006

AVG. PROD. (FOR LAST 30 PROD. SHIFTS) 740

SURVEY CONDUCTED BY Anderson

SHIFT: 06

PRODUCTION THIS SHIFT
299

TYPE OF SAMPLE	OCCUPATION CODE	CASSETTE	TIME	DUST CONC	INITIAL WEIGHT	FINAL WEIGHT	CF WGT	CF VOID	DUST STANDRD	VOID CODE	CITATION NO
1	036	57622734	480	0.386	497.098	497.375	0.008		2.00		
2	050	57622757	480	0.411	498.922	499.216	0.008		2.00		
2	053	57622763	480	0.408	496.072	496.364	0.008		2.00		
2	073	57622685	480	0.467	503.992	504.325	0.008		2.00		
2	035	57622688	480	0.724	504.658	505.170	0.008		2.00		
7	000	57622767	480	0.314	496.083	496.324	0.008		1.00		

TO:PRICE UT

57

a Card

...ette Number
57 622726

2. Mine ID Number
4 3 | 0 1 7 1 5
(min)

3. Contractor Code

4. Mine Name

5. Company Name

6. Date Sampled
0 3 | 2 4 | 0 6
Mo. Da. Yr.

7A. Sampling Start Time
0 7
(24 hr. clock)

7B. Sampling Time (min)

8. Tons This Shift

9. Type of Sample (select one)
(1) designated occ (ug)
(2) nondesignated occ (ug)
(3) designated area (ug)
(4) designated work position (sur)
(5) part 90 miner
1

10. MMU DA/SA

11. Occ Code

12. Part 90 Miner Sampled
SSN

13. Certified Person: NOTICE - Knowingly making any false statement, representation, or certification on this document is a violation of the federal criminal code which may be punished by a fine or by imprisonment or both.

SSN (b) (6)

Signature

Laboratory Analysis

Final Weight

Initial Weight

Weighed By	OSP Checked By	Void Code

Date Processed

KEEP THIS FOR YOUR RECORDS

30

30

espirable Dust Sampling
Monitoring Data

U.S. Department of Labor
Mine Safety and Health Administration

1. Type of Inspection: ☒ Regular ☒ Technical ☐ Monitoring — EOI
2. Date: 3-22-06
3. Field Office Code: 20905-01
4. Mine I. D.: 42-01715
5. Mine Name: Grandaw Canyon Mine
6. Company Name: Genwal Resources, Inc
7. MMU/DA/SA: 009
8. Times Entity/Mine Cited for Excessive Dust Last 12 Months: 0
9. AR Signature: Signature — AR Number: 23799
10. Supervisor Signature: Signature

11. Type Mining System:

☐ A. Longwall — NA
- ☐ I. Single Drum
- ☐ II. Double Drum
- ☐ III. Plow

Cut Sequence — NA
- ☐ i. Tail-Head
- ☐ ii. Head-Tail
- ☐ iii. Both

☒ B. Continuous
- ☒ I. Ripper
- ☐ II. Auger
- ☐ III. Borer

☐ C. Conventional

Other (specify): _____

12. Mining Ht.: 90 in.
Inches of Rock Mined: _____

13. Remote Operation of Miner?: ☒ Yes ☐ No

14. Type of Mining
- ☐ I. Development
- ☒ II. Retreating

15. Physical Conditions:

Face Area	☐ Wet	☒ Damp	☒ Dry		
Roadways	☒ Wet	☐ Damp	☐ Dry	☐ Compacted	

16. Type of Haulage Equipment:
☒ Electric ☐ Battery ☐ Diesel ☐ Other (specify) _____

Roof Bolter Type: — Number of Bolters
- ☐ I. Twin Head — NA
- ☐ II. Single Head
- ☐ III. Integral

A. Ventilation
- I. Operates on Separate Split of Air: ☐ Yes ☒ No
- II. Operates on Return-Side of DO: ☐ Yes ☒ No

B. Is Roof Bolter DA Established? ☐ Yes ☐ No

C. Type of Dust Control: ☐ I. Wet Head ☐ II. Dust Collector — NA

18. Dust Control Parameters - Ventilation System:

A. Method of Face Ventilation:
- ☐ I. Blowing
- ☒ II. Exhausting
- ☐ III. Both

B. Face Ventilation Device:
- ☒ I. Curtain
- ☐ II. Tubing
- ☐ III. Both

C. Line Curtain/Tubing Distance: NA ft.

D. Is Face Area Ventilated with Belt Air? ☐ Yes ☐ No

E. If, Yes, Quantity in Belt Entry: _____ cfm

F. Air Quantity: Longwall (Between 50 and 100 feet of Headgate and Tailgate)

Quantity (Q), cfm

Location	Observed	
Headgate	NA	
Tailgate		

Velocity (V), fpm

Location	Plan	Observed	
Headgate	NA		
Tailgate			

Continuous/Conventional/Handloading

2ND READING

	Plan	Observed					
Face (Q)	15,000	15,112					
MEAV (V)							
Scrubber*							

I SE END OF PILLAR LINE

MEAV (V) - for exhausting only

* - operational cfm only

31

19. Dust Control Parameters - Water Spray System:

Location	Number of Operating Sprays			Operating PSI		
	Plan	Observed		Plan	Observed	
So. MAINS	46	46		75	130	
ATOMIZER SPRAYS	2	2		40-60	50	

Sprays Located per Plan: Yes ☒ No ☐

Sprays Angled per Plan: Yes ☒ No ☐

20. Auxilliary Controls:

Scrubber Frequency Screen Checked: _____

Frequency Ductwork Checked: _____

Fan Spray Sprays Located per Plan ☐ Yes ☐ No Sprays Angled per Plan ☐ Yes ☐ No

Work Practices Describe: _____

Enclosures Describe: _____

Other (Wetting Agents; Wetting face, supports and roadways; ect.) Describe: _____

21. Are Approved Respirators Being Worn?: ☐ Yes ☒ No If Yes, By Whom: _____

Make: _____ Model: _____

22. Do Miners Work Downwind of the Longwall Shearer?: N/A ☐ Always ☐ Part of the Shift ☐ Never

. Was the Operator Cited for Violating the Dust Control Parameters of the Ventilation Plan?: ☐ Yes ☒ No

If Yes, specify: _____

24. Were Dust Control Parameters Changed During Sampling?: ☐ Yes ☐ No If Yes, specify: _____

25. Production (tons): At Time of Sampling: 299 tons At Time of Monitoring: _____ tons During Last 30 Shifts: 740 tons

26. Bi-monthly Sampling Conducted By: ☒ Operator ☐ Contractor Contractor I.D.: _____

27. Sampling Equipment: Provided By ☒ Operator ☐ Contractor Calibrated and Maintained By ☒ Operator ☐ Contractor

28. Inspector Recommendations and Comments: _____

USE SPACE BELOW FOR SKETCHES OR OTHER INFORMATION

32

WATER SPRAY DIAGRAM
12 CM 12 (REMOTE CONTROL)
SERIAL # 5062

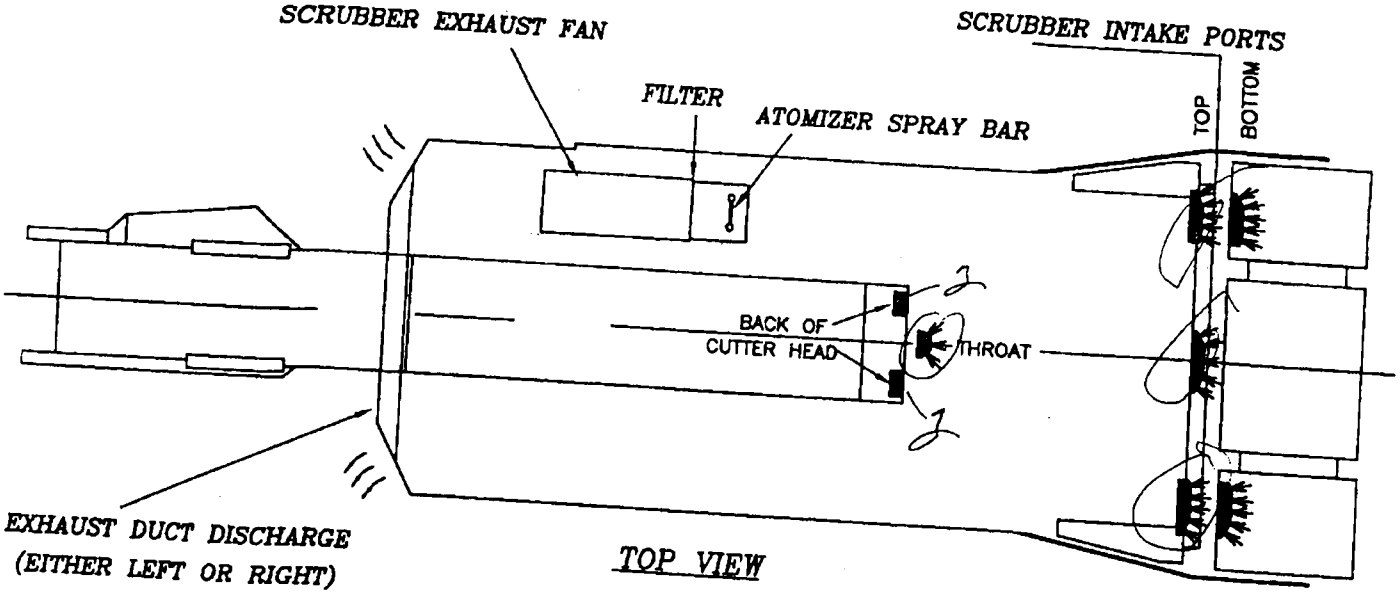

TOP VIEW

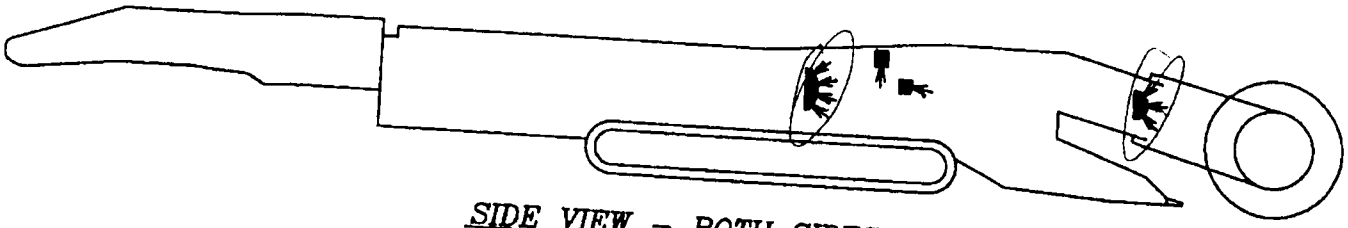

SIDE VIEW – BOTH SIDES

SPRAY NOZZLE DATA

46 CONTINUOUS SPRAYS

2 ATOMIZER SPRAYS

LEGEND

tinuous Spray ←

APPROVED
MAR - 2 2006
CMSH

33

Dust Data Card

1. Cassette Number
57 622767

2. Mine ID Number
42 01715
(min)

3. Contractor Code

4. Mine Name
Crandall Canyon Mine

5. Company Name
Genial Resources, Inc

6. Date Sampled
03 22 06
Mo. Da. Yr.

7A. Sampling Start Time
06
(24 hr. clock)

7B. Sampling Time (min)
480

8. Tons This Shift
00297

9. Type of Sample (select one)
7
(1) designated occ (ug)
(2) nondesignated occ (ug)
(3) designated area (ug)
(4) designated work position (sur)
(5) part 90 miner
Intake

10. MMU DA/SA
009 0

11. Occ Code

12. Part 90 Miner Sampled
SSN

13. Certified Person: NOTICE - Knowingly making any false statement, representation, or certification on this document is a violation of the federal criminal code which may be punished by a fine or by imprisonment or both.

SSN (b) (6) [redacted]

Sig[redacted]
x Signature [redacted]

Laboratory Analysis

Final Weight

Initial Weight

Weighed By	OSP Checked By	Void Code

Date Processed

KEEP THIS FOR YOUR RECORDS

20905-01

Dust Data Card

1. Cassette Number
57 622763

2. Mine ID Number
42 01715
(min)

3. Contractor Code

4. Mine Name
Crandall Canyon Mine

5. Company Name
Genial Resources, Inc

6. Date Sampled
03 22 06
Mo. Da. Yr.

7A. Sampling Start Time
06
(24 hr. clock)

7B. Sampling Time (min)
480

8. Tons This Shift
00297

9. Type of Sample (select one)
2
(1) designated occ (ug)
(2) nondesignated occ (ug)
(3) designated area (ug)
(4) designated work position (sur)
(5) part 90 miner

10. MMU DA/SA
009 0

11. Occ Code
053

12. Part 90 Miner Sampled
SSN

13. Certified Person: NOTICE - Knowingly making any false statement, representation, or certification on this document is a violation of the federal criminal code which may be punished by a fine or by imprisonment or both.

SSN (b) (6) [redacted]

Sig[redacted]
x Signature [redacted]

Laboratory Analysis

Final Weight

Initial Weight

Weighed By	OSP Checked By	Void Code

Date Processed

KEEP THIS FOR YOUR RECORDS

20905-01

34

Dust Data Card

1. Cassette Number 57 622688

2. Mine ID Number 42 01715 (min)

3. Contractor Code

4. Mine Name Crandall Canyon Mine

5. Company Name General Resources, Inc

6. Date Sampled 03 22 06 (Mo. Da. Yr.)

7A. Sampling Start Time 06 (24 hr. clock)

7B. Sampling Time (min) 480

8. Tons This Shift 00299

9. Type of Sample (select one) 2
(1) designated occ (ug)
(2) nondesignated occ (ug)
(3) designated area (ug)
(4) designated work position (sur)
(5) part 90 miner

10. MMU DA/SA 009 0

11. Occ Code 035

12. Part 90 Miner Sampled
SSN

13. Certified Person: NOTICE - Knowingly making any false statement, representation, or certification on this document is a violation of the federal criminal code which may be punished by a fine or by imprisonment or both.

SSN [redacted]

Sig[redacted]

X [redacted]

Laboratory Analysis

Final Weight

Initial Weight

Weighed By	OSP Checked By	Void Code

Date Processed

KEEP THIS FOR YOUR RECORDS

20905-01

Dust Data Card

1. Cassette Number 57 622685

2. Mine ID Number 42 01715 (min)

3. Contractor Code

4. Mine Name Crandall Canyon Mine

5. Company Name General Resources, Inc

6. Date Sampled 03 22 06 (Mo. Da. Yr.)

7A. Sampling Start Time 06 (24 hr. clock)

7B. Sampling Time (min) 480

8. Tons This Shift 00299

9. Type of Sample (select one) 2
(1) designated occ (ug)
(2) nondesignated occ (ug)
(3) designated area (ug)
(4) designated work position (sur)
(5) part 90 miner

10. MMU DA/SA 009 0

11. Occ Code 073

12. Part 90 Miner Sampled
SSN

13. Certified Person: NOTICE - Knowingly making any false statement, representation, or certification on this document is a violation of the federal criminal code which may be punished by a fine or by imprisonment or both.

SSN [redacted]

Si[redacted]

X [redacted]

Laboratory Analysis

Final Weight

Initial Weight

Weighed By	OSP Checked By	Void Code

Date Processed

KEEP THIS FOR YOUR RECORDS

20905-01

Dust Data Card

1. Cassette Number: 57 622734

2. Mine ID Number: 4 2 0 1 7 1 5 (min)

3. Contractor Code:

4. Mine Name: Crandall Canyon Mine

5. Company Name: Genwal Resources Inc

6. Date Sampled: Mo. 0 8 Da. 2 2 Yr. 0 6

7A. Sampling Start Time: 0 6 (24 hr. clock)

7B. Sampling Time (min): 4 8 0

8. Tons This Shift: 0 0 3 7 7

9. Type of Sample (select one): 1
(1) designated occ (ug)
(2) nondesignated occ (ug)
(3) designated area (ug)
(4) designated work position (sur)
(5) part 90 miner

10. MMU DA/SA: 0 0 9 0

11. Occ Code: 0 5 6

12. Part 90 Miner Sampled
SSN

13. Certified Person: NOTICE - Knowingly making any false statement, representation, or certification on this document is a violation of the federal criminal code which may be punished by a fine or by imprisonment or both.

SSN (b) (6)

Sig
X Signature

Laboratory Analysis

Final Weight

Initial Weight

Weighed By	OSP Checked By	Void Code

Date Processed

KEEP THIS FOR YOUR RECORDS

Dust Data Card

1. Cassette Number: 57 622757

2. Mine ID Number: 4 2 0 1 7 1 5 (min)

3. Contractor Code:

4. Mine Name: Crandall Canyon Mine

5. Company Name: Genwal Resources Inc

6. Date Sampled: Mo. 0 8 Da. 2 2 Yr. 0 6

7A. Sampling Start Time: 0 6 (24 hr. clock)

7B. Sampling Time (min): 1 8 0

8. Tons This Shift: 0 0 3 7 7

9. Type of Sample (select one): 2
(1) designated occ (ug)
(2) nondesignated occ (ug)
(3) designated area (ug)
(4) designated work position (sur)
(5) part 90 miner

10. MMU DA/SA: 0 0 9 0

11. Occ Code: 0 5 0

12. Part 90 Miner Sampled
SSN

13. Certified Person: NOTICE - Knowingly making any false statement, representation, or certification on this document is a violation of the federal criminal code which may be punished by a fine or by imprisonment or both.

SSN (b) (6)

Sig
X Signature

Laboratory Analysis

Final Weight

Initial Weight

Weighed By	OSP Checked By	Void Code

Date Processed

KEEP THIS FOR YOUR RECORDS

MSHA Form 7000-10I, June 93 (revised)

DAILY COVER SHEET

Date 3-22-06 Event No. 4476383

Arrived at the Mine ___ ___ Departed from the Mine ___

List Records Books Checked

PRE-SHIFTS

Accompanied By: Company Representative

STEVE RADMALL - SAFETY

Miners Representative

NONE

AREAS OF INSPECTION ACTIVITY:

E01 - CRANDALL CANYON

RESPIRABLE DUST SURVEY

SO. MAINS MN4-009

MEET WITH

(b) (7)(C)

Inspector's Initials TA 3-24-06

Supervisor's Initials and Date ___ Page No. 1

*U.S. Government Printing Office: 1997 - 508-470

MSHA Form 7000-10K, June 93 (revised)

Date 3-22-06

PUT PUMPS ON CREW

0600 hr - PUMPS OK.

TRAVEL TO SO. MAINS

SECTION DOWN AT START OF SHIFT - MRS NOT WORKING -

CHECK PERMIT ON CM # 5062 - OK.

CHECK PARAMETERS

SPRAYS - OK (46)

PSI - 135 - ATOMIZER (2)

PSI - 55

AIR READING AT PILLAR LINE

VELOCITY: 119

AREA: 7½ X 21 = 157.5

CFM = 18,742

Inspector's Initials TA

Supervisor's Initials and Date 3-24-06 Page No. 2

*U.S.GPO: 2004 - 642 - 912

MSHA Form 7000-10K, June 93 (revised)

Date 3-22-06

CHECK PUMPS 0630 hr. OK.

CHECK 1ST EAST SEALS (3) 2ND EAST (3) 3RD EAST (3) OFF LEEY SIDE #1 INTAKE ENTRY OF SO. MAINS - SEALS OK. NO HAZARDS OBSERVED AT TIME OF MY EXAM ROOF - RIBS - ROCK DUST - GASES - D.T.I. OK

WENT BACK TO SECTION WANK PILLAR LINE - OK. NO HAZARDS OBSERVED. D.T.I OK.

SECTION PUSHING PILLARS ROADWAYS WET - FACE AREA - DRY TO DAMP

Inspector's Initials TA

Supervisor's Initials and Date 3-24-06 Page No. 3

*U.S.GPO: 2004 - 642 - 912

MSHA Form 7000-10K, June 93 (revised)

Date 3-22-06

CHECKED CREWS SCSR'S OK.

#106245 - 10/04

107915 - 11/05 - 101359 - 8/04

110946 - 1/05 - 98841 - 4/03

105537 - 6/04 - 105921 - 7/04

LAST 90 DAY CHECK 3-06

CHECK PARAMETERS ON CM -

SPRAYS - OK PSI = 130

ATOMIZER SPRAY OK. PSI = 50

AIR READING PILLAR LINE

VELOCITY = 115

AREA = 7½ x 21' = 157.5

CFM = 18,112

Inspector's Initials TA

Supervisor's Initials and Date [illegible] 3-24-06 Page No. 4

*U.S.GPO: 2004 - 642 - 912

MSHA Form 7000-10K, June 93 (revised)

Date 3-22-06

SECTIONS AVERAGE TONAGE

LAST 30 SHIFTS = 740

SECTION LOADED 26

S/C @ 11½ TON PER

CAR = 299 TONS AT

TIME OF SAMPLING

Inspector's Initials TA

Supervisor's Initials and Date [illegible] 3-24-06 Page No. 5

*U.S.GPO: 2004 - 642 - 912

38

3-22-06

CRANDALL CANYON

SO. MAINS - MMU-009

A-1	622734	036	CM OPER	0600	0830	1400
A-2	2757	050	S/C-STAND OPER			
A-3	2688	035	CM HEADER			
A-4	2685	073	S/C OPP. FACE			
A-5	2763	053	MAN			
A-6	2767	7	INTAKE			
	2726		CONTROL FILTER			
	TA					

6

MSHA Form 7000-10K, June 93 (revised)

Date 3-23-06

OK. GASES - O.T.I OK. OLD SUMP AREA IN MAIN NO. OK. NO HAZARDS OBSERVED WENT TO LAMP ROOM/ BATH HOUSE, CHECKED THE FOLLOWING RECORDS/ BOOKS; SURFACE + UNDERGROUND ELECTRICAL MAP - WEEKLY OF ELEC. EQUIP - MONTHLY CIRCUIT BREAKER TEST - LOW/MED/HIGH VOLTAGE CIRCUIT TESTS - MONTHLY ELEC. EQUIP TESTS - FIRE DRILLS, FIGHTING & EVACUATION PLAN - WARNING DEVICE & FIRE SENSOR YEARLY CHECK

Inspector's Initials TA

Supervisor's Initials and Date OTF 3-24-06 Page No. 4

*U.S.GPO: 2004 - 642 - 912

MSHA Form 7000-10K, June 93 (revised)

Date 3-23-06

FIRE HYDRANTS, VALVES & HOSE CHECKS - WEEKLY FIRE SUPPRESSION DEVICES CHECKS - ALL RECORDS/ BOOKS/ PLANS APPEARED TO BE IN ORDER AT TIME OF MY EXAM.

WENT TO UNDERGROUND PARKING AREA. CITATION #7282797 1750 hr - 75.400 ACCUMULATION OF 11 AREOL CANS WERE PRESENT IN THE BED OF THE #15-2 TRUCK PARKED IN THE UNDER-GROUND PARKING AREA. 4 CANS CONTACT CLEANER

Inspector's Initials TA

Supervisor's Initials and Date OTF 3-24-06 Page No. 5

*U.S.GPO: 2004 - 642 - 912

MSHA Form 7000-10K, June 93 (revised)

Date 3-23-06

1 CAN RED PAINT - 3 CANS LIQUID WRENCH 1 CAN LUBE EZE 1 " SILICONE LUBRICANT 1 " SAFETY SOLVENT 1 EXPOSED - MOD/NEG NO LOST DAYS - UNLIKELY TRUCK PARKED - COULD NOT DETERMINE HOW LONG OR WHO KNEW OF CONDITION. CITATION ABATED 18:05 hr CANS REMOVED. [redacted] CHECK REMAINDER OF UNDER GROUND PARKING AREA - OK. NO HAZARDS OBSERVED - ROOF - RIBS ROCK DUST. GASES - O.T.I OK.

Inspector's Initials TA

Supervisor's Initials and Date OTF 3-24-06 Page No. 6

*U.S.GPO: 2004 - 642 - 912

MSHA Form 7000-10K, June 93 (revised)

Date 3-23-06

(NONE)

THE WALKS IN THE RETURN WAS DONE WITH (b) (7)(C)

Inspector's Initials TA

Supervisor's Initials and Date _____ Page No. 7

*U.S.GPO: 2004 - 642 - 912

MSHA Form 7000-10k, June 93 (revised)

Date 3-23-06

Except as previously noted, in all areas traveled during todays inspection, DT&I's sufficient and up to date. No low 0_2 or CH_4 detected beyond normal range. Roof and Rib support appears adequate. Ventilation Controls in place, Air flowing in the proper direction and Velocities are adequate. Clean up and Rock Dust adequate with no combustible materials present. Fire suppression equipment in place as required.

Inspectors Initials TA

Supervisors Initials and Date _____ Page No 8

*U.S. Government Printing Office: 1995 -609-287

MSHA Form 7000-10I, June 93 (revised)

DAILY COVER SHEET

Date 3-23-06 Event No. 4476383

Arrived at the Mine _____ Departed from the Mine _____

List Records Books Checked PRE-SHIFT & WEEKLY

Accompanied By: Company Representative _____

CLARK ATWOOD

Miners Representative NONE

AREAS OF INSPECTION ACTIVITY:

E.O.I. - CRANDALL CANYON RETURN - SEALS - FAN

MEET WITH (b) (7)(C)

Inspector's Initials TA

Supervisor's Initials and Date GF 3-24-06 Page No 1

*U.S. Government Printing Office: 1997 - 508-470

MSHA Form 7000-10K, June 93 (revised)

Date 3-23-06

WENT TO FAN - TOOK AIR READING & BOTTLE SAMPLE 100' INBY FAN -

VELOCITY = 2109

AREA = 113

CFM = 238,317

BOTTLE # V3285

FAN BLDG - OK

WENT TO BATH HOUSE - OBSERVED SMOKER SEARCH OF AFTN SHIFT - OK

TRAVEL TO X-CUT # 90 OF MAIN WEST.

WALK MAIN WEST RETURN ENTRY (SECONDARY) OK. NO HAZARDS OBSERVED

Inspector's Initials TA

Supervisor's Initials and Date GF 3-24-06 Page No. 2

*U.S.GPO: 2004 - 642 - 912

MSHA Form 7000-10K, June 93 (revised)

Date 3-23-06

ROOF - RIBS - ROCK DUST GASES - D.T.I OK.

1ST NO. SEALS (4) & MAIN NO. SEALS (4) OFF MAIN WEST RETURN - OK. NO HAZARDS OBSERVED. ROOF - RIBS - ROCK DUST GASES - D.T.I OK

WALK MAIN NO RETURN (SECONDARY) TO FAN - OK. NO HAZARDS OBSERVED - ROOF - RIBS ROCK DUST GASES - D.T.I OK.

MAIN EAST SEALS (4) OFF MAIN NO. RETURN

Inspector's Initials TA

Supervisor's Initials and Date GF 3-24-06 Page No. 3

*U.S.GPO: 2004 - 642 - 912

Price #1 Report
Farmer
Anderson

**0905-0001
REPORT NO: MSD014

RESPIRABLE DUST SAMPLING INSPECTION RESULTS

MARCH 29, 2006

MINE ID NUMBER

42-01715

MINE NAME - CRANDALL CANYON MINE

COMPANY NAME - GENWAL RESOURCES INC

McAdile
03/30/06

ENTITY ID 900-0

SAMPLING DATE 03-27-2006

AVG. PROD. (FOR LAST 30 PROD. SHIFTS) _____

SURVEY CONDUCTED BY Anderson

PRODUCTION THIS SHIFT
00

SHIFT: 06

TYPE OF SAMPLE	OCCUPATION CODE	CASSETTE	TIME	DUST CONC	INITIAL WEIGHT	FINAL WEIGHT	CF WGT	CF VOID	DUST STANDRD	VOID CODE	CITATION NO
4	304	57641854	480	0.094	514.034	514.107	0.007		2.00		_____

TO:PRICE UT

ch

**0905-0002
REPORT NO: MSD014

RESPIRABLE DUST SAMPLING INSPECTION RESULTS

Price - #1 Report
Farmer
Anderson

MARCH 29, 2006

MINE ID NUMBER

42-01715

MINE NAME - CRANDALL CANYON MINE

COMPANY NAME - GENWAL RESOURCES INC

McA File
03/30/06

ENTITY ID 999-0

SAMPLING DATE 03-27-2006

AVG. PROD. (FOR LAST 10 PROD. SHIFTS) _____

SURVEY CONDUCTED BY Anderson

PRODUCTION THIS SHIFT
00

SHIFT: 06

TYPE OF SAMPLE	OCCUPATION CODE	CASSETTE	TIME	DUST CONC	INITIAL WEIGHT	FINAL WEIGHT	CF WGT	CF VOID	DUST STANDRD	VOID CODE	CITATION NO
8	304	57641860	480	0.182	514.511	514.645	0.007		2.00		
8	328	57641855	480	0.058	512.479	512.527	0.007		2.00		
8	368	57641856	480	0.497	514.379	514.732	0.007		2.00		

Dust Data Card

1. Cassette Number 57 641860

2. Mine ID Number [illegible] (min)

3. Contractor Code

4. Mine Name [illegible]

5. Company Name [illegible]

6. Date Sampled [illegible] Mo. [illegible] Da. [illegible] Yr.

7A. Sampling Start Time [illegible] (24 hr. clock)

7B. Sampling Time (min) [illegible]

8. Tons This Shift

9. Type of Sample (select one) 2
(1) designated occ (ug)
(2) nondesignated occ (ug)
(3) designated area (ug)
(4) designated work position (sur)
(5) part 90 miner

10. MMU DA/SA [illegible]

11. Occ Code [illegible]

12. Part 90 Miner Sampled
SSN

13. Certified Person: NOTICE - Knowingly making any false statement, representation, or certification on this document is a violation of the federal criminal code which may be punished by a fine or by imprisonment or both.

SSN [redacted]

Sig[redacted]

x [redacted]

Laboratory Analysis

Final Weight

Initial Weight

Weighed By	OSP Checked By	Void Code

Date Processed

KEEP THIS FOR YOUR RECORDS

[illegible]

Dust Data Card

1. Cassette Number 57 641854

2. Mine ID Number [illegible] (min)

3. Contractor Code

4. Mine Name [illegible]

5. Company Name [illegible]

6. Date Sampled [illegible] Mo. [illegible] Da. [illegible] Yr.

7A. Sampling Start Time [illegible] (24 hr. clock)

7B. Sampling Time (min) [illegible]

8. Tons This Shift

9. Type of Sample (select one) 4
(1) designated occ (ug)
(2) nondesignated occ (ug)
(3) designated area (ug)
(4) designated work position (sur)
(5) part 90 miner

10. MMU DA/SA [illegible]

11. Occ Code 304

12. Part 90 Miner Sampled
SSN

13. Certified Person: NOTICE - Knowingly making any false statement, representation, or certification on this document is a violation of the federal criminal code which may be punished by a fine or by imprisonment or both.

SSN [redacted]

Signature

x [redacted]

Laboratory Analysis

Final Weight

Initial Weight

Weighed By	OSP Checked By	Void Code

Date Processed

KEEP THIS FOR YOUR RECORDS

[illegible]

Dust Data Card

1. Cassette Number 57 641855

2. Mine ID Number 4 2 0 1 7 1 5 (min)

3. Contractor Code

4. Mine Name Crandall Canyon Mine

5. Company Name Genwal Resources Inc

6. Date Sampled 0 2 2 7 0 6 (Mo. Da. Yr.)

7A. Sampling Start Time 0 6 (24 hr. clock)

7B. Sampling Time (min) 4 8 0

8. Tons This Shift

9. Type of Sample (select one) 8
(1) designated occ (ug)
(2) nondesignated occ (ug)
(3) designated area (ug)
(4) designated work position (sur)
(5) part 90 miner

10. MMU DA/SA 9 9 7 0

11. Occ Code 3 2 8

12. Part 90 Miner Sampled
SSN

13. Certified Person: NOTICE - Knowingly making any false statement, representation, or certification on this document is a violation of the federal criminal code which may be punished by a fine or by imprisonment or both.

SSN [redacted] (b) (6)

Signature

Final Weight

Initial Weight

Weighed By	OSP Checked By	Void Code

Date Processed

KEEP THIS FOR YOUR RECORDS

Dust Data Card

1. Cassette Number 57 641856

2. Mine ID Number 4 2 0 1 7 1 5 (min)

3. Contractor Code

4. Mine Name Crandall Canyon Mine

5. Company Name Genwal Resources Inc

6. Date Sampled 0 2 2 7 0 6 (Mo. Da. Yr.)

7A. Sampling Start Time 0 6 (24 hr. clock)

7B. Sampling Time (min) 4 8 0

8. Tons This Shift

9. Type of Sample (select one) 8
(1) designated occ (ug)
(2) nondesignated occ (ug)
(3) designated area (ug)
(4) designated work position (sur)
(5) part 90 miner

10. MMU DA/SA 9 9 7 0

11. Occ Code 3 2 8

12. Part 90 Miner Sampled
SSN

13. Certified Person: NOTICE - Knowingly making any false statement, representation, or certification on this document is a violation of the federal criminal code which may be punished by a fine or by imprisonment or both.

SSN [redacted] (b) (6)

Signa

Laboratory Analysis

Final Weight

Initial Weight

Weighed By	OSP Checked By	Void Code

Date Processed

KEEP THIS FOR YOUR RECORDS

Dust Data Card

1. Cassette Number

57 641809

2. Mine ID Number

42 01715

(min)

3. Contractor Code

4. Mine Name

[illegible]

5. Company Name

[illegible]

6. Date Sampled

05 27 06

Mo. Da. Yr.

7A. Sampling Start Time

06

(24 hr. clock)

7B. Sampling Time (min)

8. Tons This Shift

9. Type of Sample (select one)

(1) designated occ (ug)

(2) nondesignated occ (ug)

(3) designated area (ug)

(4) designated work position (sur)

(5) part 90 miner

9

C

10. MMU DA/SA

11. Occ Code

12. Part 90 Miner Sampled

SSN

13. Certified Person: NOTICE - Knowingly making any false statement, representation, or certification on this document is a violation of the federal criminal code which may be punished by a fine or by imprisonment or both.

SSN (b) (6) [redacted]

Signature

x Signature [redacted]

Laboratory Analysis

Final Weight

Initial Weight

Weighed By	OSP Checked By	Void Code

Date Processed

KEEP THIS FOR YOUR RECORDS

[illegible]

46

LH

3-27-06

CRANDALL CANYON
SURFACE

B-1	1860	304	SHOP MECH.	0600	0945	1400
B-2	1854	304	" (DWP)			
B-3	1855	328	YARD UTILITY			
B-4	1856	368	DOZER OPER.			

1809 CONTROL FILTER

TA

7

MSHA Form 7000-10I, June 93 (revised)

DAILY COVER SHEET

Date 3-26-06 Event No. 4476283

Arrived at the Mine _____ Departed from the Mine _____

List Records Books Checked _____

PRE-SHIFT - WEEKLY

Accompanied By: Company Representative _____

STEVE RADMALL - SAFETY

Miners Representative _____

AREAS OF INSPECTION ACTIVITY:

EOL - CRANDALL CANYON

GRAVE YARD SHIFT

MEET WITH STEVE RADMALL, SAFETY -

WENT TO BATH HOUSE - OBSERVED SMOKER SEARCH, OK.

Inspector's Initials TA

Supervisor's Initials and Date TAF 5-3-06 Page No. 1

*U.S. Government Printing Office: 1997 - 508-470

MSHA Form 7000-10K, June 93 (revised)

Date 3-26-06

CHECK C-Y SHIFT

CREWS SCSR's -

*100858 - 11/03 *101863 - 1/04

*97388 - 11/03 101929 - 1/04

105644 - 6/04 - 52079 8/92

101761 8/04 113549 3/05

61304 7/98 97398 6/03

LAST 90 DAY CHECK

3-06

TRAVEL TO SO. MAINS - PILLAR SECTION

MMU - 009

WALK PILLAR LINE / WITH EXAMINER

NO HAZARDS OR IMMINENT DANGER OBSERVED -

WENT TO FEEDER BREAKER

Inspector's Initials TA

Supervisor's Initials and Date TAF 5-3-06 Page No. 2

*U.S.GPO: 2004 - 642 - 912

MSHA Form 7000-10K, June 93 (revised)

Date 3-26-06

CITATION #7282798

0,00 HR - 75.400

ACCUMULATION OF DRY TO DAMP LOOSE COAL JUST INBY THE FEEDER BREAKER ON THE RIGHT SIDE & LEFT SIDE ROADWAY COMING TO THE FEEDER.

ACCUMULATIONS MEASURED ON LEFT SIDE 21' LONG 13" TO 3½ FT DEEP & 9' WIDE. RIGHT SIDE MEASURED 13" DEEP - 10' WIDE - 25' LONG

2 EXPOSED - NO LOST DAYS

MOD/NEG - UNLIKELY - ONLY 2 MECHANICS IN

Inspector's Initials TA

Supervisor's Initials and Date TAF 5-3-06 Page No. 3

*U.S.GPO: 2004 - 642 - 912

MSHA Form 7000-10K, June 93 (revised)

Date 3-26-06

SECTION AT TIME OF CITATION - THIS SHIFT IS THE DOWN SHIFT - NO CH4 DETECTED - NO IGNITION SOURCE AND ACCUMULATIONS. CONDITION EXISTED FOR AT LEAST ONE SHIFT & AFTN SHIFT SHOULD HAVE KNOWN. GAVE UNTIL 0800 hr TO ABATE DUE TO THE BATTERY SCOOP BEING BROKE DOWN - "REACH" PROGRAM REVIEWED WITH SAFETY - EXAM & INCENTIVE TO CORRECT

Inspector's Initials TA

Supervisor's Initials and Date 4/07-5-306 Page No. 4

*U.S.GPO: 2004 - 642 - 912

MSHA Form 7000-10K, June 93 (revised)

Date 3-26-06

OBSERVED WORK PRACTICES OF MECHANICS IN SECTION - APPEARED TO BE OK.

TRAVEL TO 3RD NO. AREA. CHECK #3 PC AT MOUTH OF 3RD NO. OK. FIRE PROTECTION OK.

TRAVEL 3RD NO. INTAKE ENTRY - OK. ROOF - RIBS ROCK DUST - GASES - D.T.J OK.

3RD NO. INTAKE SEALS (5) OK. NO HAZARDS OBSERVED - ROOF - RIBS ROCK DUST GASES - D.T.J OK

Inspector's Initials TA

Supervisor's Initials and Date 4/07-5-306 Page No. 5

*U.S.GPO: 2004 - 642 - 912

MSHA Form 7000-10K, June 93 (revised)

Date 3-26-06

BATTERY CHARGING STATION AT END OF 3RD NO. OK. FIRE PROTECTION OK. WALK RETURN ENTRY OF 3RD NO. TO MAIN WEST RETURN - OK. ROOF - RIBS - ROCK DUST GASES - D.T.J OK. 2ND RIGHT & 1ST RIGHT GATE SEALS - OFF 3RD NO. RETURN. OK. NO HAZARDS OBSERVED. GASES - D.T.J OK.

WALK BLEEDER ENTRIES OF 1ST SO. MAINS, 3 1/4 EAST, 1ST WEST HEAD

Inspector's Initials TA

Supervisor's Initials and Date 4/07-5-306 Page No. 6

*U.S.GPO: 2004 - 642 - 912

MSHA Form 7000-10K, June 93 (revised)

Date 3-26-06

GATES, 3RD LEFT + BACK SIDE OF PANEL 19 — ENTRIES OK - GASES O.T.I. OK. TIMBER BEING SET IN 1ST WEST HG & 1ST SO. MAINS — PUMPS IN AREA - OK. FIRE PROTECTION OK. TRAVEL BACK TO SURFACE

Inspector's Initials TA

Supervisor's Initials and Date OTF 5-30-06 Page No. 7

*U.S.GPO: 2004 - 642 - 912

MSHA Form 7000-10k, June 93 (revised)

Date 3-26-06

Except as previously noted, in all areas traveled during todays inspection, DT&I's sufficient and up to date. No low 0_2 or CH_4 detected beyond normal range. Roof and Rib support appears adequate. Ventilation Controls in place, Air flowing in the proper direction and Velocities are adequate. Clean up and Rock Dust adequate with no combustible materials present. Fire suppression equipment in place as required.

Inspectors Initials TA

Supervisors Initials and Date

Page No 8

*U.S. Government Printing Office: 1995 -609-287

MSHA Form 7000-10I, June 93 (revised)

DAILY COVER SHEET

Date 3-27-06 Event No. 4476283

Arrived at the Mine ____ Departed from the Mine ____

List Records Books Checked

PRE-SHIFTS

Accompanied By: Company Representative

JIM PRUITT - SAFETY

Miners Representative

NONE

AREAS OF INSPECTION ACTIVITY:

2E01 - CRANDALL CANYON SURFACE RESPIRABLE DUST SURVEY

MEET WITH JIM PRUITT, SAFETY

PUT PUMPS ON SURFACE. PEOPLE 0600 hr - PUMPS

Inspector's Initials TA

Supervisor's Initials and Date TF 5-3-06 Page No. 1

*U.S. Government Printing Office: 1997 - 508-470

MSHA Form 7000-10K, June 93 (revised)

Date 3-27-06

OK - FLOW 2.0

TRAVEL TO SO. MAINS SECTION - MMU 009 - CHECK FEEDER BREAKER OK. ACCUMULATIONS CLEANED & AREA ROCK DUSTED - CITATION # 7282798 ABATED 0830 hr. - TRAVEL BACK TO SURFACE -

CHECK UPPER BATH HOUSE, LAMP ROOM, & OFFICES - OK. FIRE PROTECTION OK. - LOWER BATH HOUSE, MINE OFFICES, WAREHOUSE - OK. FIRE PROTECTION OK.

Inspector's Initials TA

Supervisor's Initials and Date TF 5-3-06 Page No. 2

*U.S.GPO: 2004 - 842 - 912

MSHA Form 7000-10K, June 93 (revised)

Date 3-27-06

CONSPEC AREA - OK

COMMUNICATION & FIRST AID - OK. MINE RESCUE ROOM OK. - COMPRESSED GAS STORAGE AREA - SUBSTATION - EXPLOSIVE MAGAZINES - BULK ROCK DUSTER STATION - OK. FIRE PROTECTION OK.

CHECK FORK LIFT #534 DG-45 - OK.

WA 450 KOMATSU FRONT END LOADER - OK.

CHECK PUMPS - OK.

0945 hr

WALK STACKER BELT, NEW PORTAL BELT, LOAD OUT BELT, RECLAIM BELT

Inspector's Initials TA

Supervisor's Initials and Date TF 5-3-06 Page No. 3

*U.S.GPO: 2004 - 842 - 912

MSHA Form 7000-10K, June 93 (revised)

Date 3-27-06

DRAW OFF TUNNEL BELT - BELTS OK. FIRE PROTECTION DRIVE AREAS, GUARDING WALKWAYS - OK.

FUEL STORAGE TANK STORAGE AREA - OK. FIRE PROTECTION OK.

CITATION # 7282799 1110 hr - 47.44 (b) 2-5 GAL SAFETY CANS (PORTABLE CONTAINERS) WAS NOT LABELED OR MARKED TO IDENTIFY THE CONTENTS. BOTH CANS WERE FULL. I CAN WAS AT THE FUEL STORAGE AREA,

Inspector's Initials TA

Supervisor's Initials and Date 0707 5-3-06 Page No. 4

*U.S.GPO: 2004 - 642 - 912

MSHA Form 7000-10K, June 93 (revised)

Date 3-27-06

AND I CAN AT THE TRUCK LOAD OUT BELT. WHEN CHECKED THE CONTENTS WAS FOUND TO BE DIESEL FUEL. I EXPOSED - NO LAST DAYS MOD/WEEK - UNLIKELY COULD NOT DETERMINE HOW LONG OR WHO KNEW OF CONDITION. CITATION ABATED AT 1120 hr. SAFETY CANS IDENTIFIED.

CHECKED MCC ROOM - TOOL SHED - CRUSHER BLDG - TRUCK LOAD OUT BLDG - DRAW OFF TUNNEL.

Inspector's Initials TA

Supervisor's Initials and Date 0707 5-3-06 Page No. 5

*U.S.GPO: 2004 - 642 - 912

MSHA Form 7000-10K, June 93 (revised)

Date 3-27-06

ALL AREAS OK. FIRE PROTECTION - ELECTRICAL OK.

CHECKED THE D9 CAT DOZER - OK. FIRE PROTECTION OK

GATHER PUMPS - SHUT OFF 1400 hr. -

Inspector's Initials TA

Supervisor's Initials and Date 0707 5306 Page No. 6

*U.S.GPO: 2004 - 642 - 912

57

MSHA Form 7000-101, June 93 (revised)

DAILY COVER SHEET

Date 3-29-06 Event No. 4426283

Arrived at the Mine _____ Departed from the Mine _____

List Records Books Checked _____

Accompanied By: Company Representative _____

JIM FRUITT, SAFETY

Miners Representative _____

NONE

AREAS OF INSPECTION ACTIVITY:

E01 - CRANDALL CANYON

NOISE SURVEY - OUTBY SURFACE

MEET WITH JIM FRUITT, SAFETY - POWER OFF AT MINE SITE UPON ARRIVAL -

Inspector's Initials TA

Supervisor's Initials and Date TT 5/30/06 Page No 1

*U.S. Government Printing Office: 1997 - 508-470

MSHA Form 7000-10K, June 93 (revised)

Date 3-29-06

PUT DOSIMETERS ON PEOPLE about hr.

#8098 - SURFACE / UNITY MAN

#8091 - SURFACE /

#8092 - SURFACE /

#8093 - OUTBY /

#8094 - OUTBY /

#4514 - OUTBY /

#4515 - OUTBY /

[redacted] (b)(7)(C)

Inspector's Initials TA

Supervisor's Initials and Date TT 5-30-06 Page No. 2

*U.S.GPO: 2004 - 642 - 912

MSHA Form 7000-10K, June 93 (revised)

Date 3-29-06

POWER STILL OFF 0900hrs.
ALL PEOPLE WORKING ON SURFACE AREAS, BELTS & SHOP.
HEARING PROTECTION, PLUGS & MUFF ARE PROVIDED THEY WEAR THEM WHEN NEEDED.
POWER TO MINE OFF ALL DAY - CREWS WORKED 8 hrs -
GATHER DOSIMETERS -

HAD CLOSE - OUT MEETING WITH [redacted] (b) (7)(C)

Inspector's Initials TA

Supervisor's Initials and Date _____ Page No. 3

*U.S.GPO: 2004 - 642 - 912

MSHA Form 7000-10K, June 93 (revised)

Date 3-29-06

REVIEWED CITATIONS - NEW LONGWALL SET-UP ABOUT COMPLETE - APPEARED TO BE GOING WELL - TOLD THEM TO KEEP UP WITH ROADWAYS ONCE MOVE COMPLETE - FOR THE MOST PART, THE MINE APPEARED TO BE IN GOOD ORDER - WORK HABITS, SAFETY & ATTITUDES APPEARED TO BE GOOD - NO OTHER COMMENTS

Inspector's Initials TA

Supervisor's Initials and Date _____ Page No. 4

*U.S.GPO: 2004 - 642 - 912

CMS&H Noise Report

U.S. Department of Labor
Mine Safety and Health Administration

00143761

A. Mine ID/Contractor ID Number	B. Event Number	C. AR Number	D. Office Code	E. Survey Date (Mo Day Year)	F. Activity Code
42-01715	4476283	23799	20905	03 29 06	E01

G. Mine Name: CRANDALL CANYON MINE

H. Company Name: GENWAL RESOURCES INC

I. Survey Sample Number	1	2	3	4	5	6
J. Survey Type	Initial X / Follow-up	Initial X / Follow-up	Initial X / Follow-up	Initial X / Follow-up	Initial X / Follow-up	Initial X / Follow-up
K. P-Code						
L. MMU/Pit/Area Surveyed	-507	-504	-505	-404	-404	-404
M. Instrument Property Number	8090	8091	8092	8093	8094	45144
N. Calibrator Property Number	8095	8095	8095	8095	8095	45106
O. Miner's Last Name/First Initial	(b) (7)(C)					
P. Occupation Code						
Q. Machine Code	17	03	40	40	40	08
R. Manufacturer's Code	049	018	120	120	120	040
S. Time Start (24 Hr. Clock)	0600	0600	0600	0600	0600	0600
T. Total Survey Time (Minutes)	480	480	480	480	480	480
U. Production this Shift						
V. 85 Action Level Dose (Dosimeter I) (no decimals)	36	17	10	8	1	20
W. 90 PEL Dose (Dosimeter II) (no decimals)	9	7	5	3	1	10
X. 90 PEL Max (no decimals)	106	105	110	108	109	118
Y. UCL (117 dBA) Time (Minutes)	000	000	000	000	000	000
Z. Calibration Check (Y or N)	Before Y / After Y	Before Y / After Y	Before Y / After Y	Before Y / After Y	Before Y / After Y	Before Y / After Y
AA. Type of PHP	Muff / Plug X / Cap	Muff / Plug X / Cap	Muff / Plug X / Cap	Muff / Plug X / Cap	Muff / Plug X / Cap	Muff / Plug X / Cap
	Y	Y	Y	Y	Y	Y
AC. Citation Number						

Comments:

Front, MS :000-84

Rev. Oct. 2000

CMS&H Noise Report

U.S. Department of Labor
Mine Safety and Health Administration

00143842

A. Mine ID/Contractor ID Number	B. Event Number	C. AR Number	D. Office Code	E. Survey Date (Mo / Day / Year)	F. Activity Code
42-01715	4476283	23799	20905	03 / 29 / 06	E01

G. Mine Name: CRANDALL CANYON MINE

H. Company Name: GENWAL RESOURCES

I. Survey Sample Number	1	2	3	4	5	6
J. Survey Type	Initial [X] / Follow-up	Initial / Follow-up	Initial / Follow-up	Initial / Follow-up	Initial / Follow-up	Initial / Follow-up
K. P-Code						
L. MMU/Pit/Area Surveyed	004					
M. Instrument Property Number	4515					
N. Calibrator Property Number	4519					
O. Miner's Last Name/First Initial	(b) (7)(C)					
P. Occupation Code						
Q. Machine Code	08					
R. Manufacturer's Code	040					
S. Time Start (24 Hr. Clock)	0600					
T. Total Survey Time (Minutes)	480					
U. Production this Shift						
V. 85 Action Level Dose (Dosimeter I) (no decimals)	028					
W. 90 PEL Dose (Dosimeter II) (no decimals)	015					
X. 90 PEL Max (no decimals)	118					
Y. UCL (117 dBA) Time (Minutes)	000					
Z. Calibration Check (Y or N)	Before Y / After Y	Before / After	Before / After	Before / After	Before / After	Before / After
AA. Type of PHP	Muff / Plug [X] / Cap	Muff / Plug / Cap	Muff / Plug / Cap	Muff / Plug / Cap	Muff / Plug / Cap	Muff / Plug / Cap
	Y					

AC. Citation Number

Comments:

Front, MS 2000-84

Rev. Oct. 2000