MSHA HANDBOOK SERIES

U. S. Department of Labor
Mine Safety and Health Administration
Coal Mine Safety and Health
May 1993

Handbook Number: PH93-V-7

COAL ELECTRICAL INSPECTION PROCEDURES

Preface

This handbook sets forth procedures for MSHA personnel to follow when conducting electrical surveys, investigations and inspections of underground and surface coal mines. The instructions in this handbook are primarily procedural and administrative. Previously issued Procedural and administrative instructions for this same subject material are superseded by this handbook. Compliance related instructions that are contained in the MSHA Program Policy Manual are not superseded by this handbook.

Marvin W. Nichols 5/10/93

Marvin W. Nichols Date
Administrator
for Coal Mine Safety and Health

TABLE OF CONTENTS

Chapter 1 Introduction.....1-1
A. Inspection Schedules.....1-1
B. Preparation for Inspection – Equipment and Supplies.....1-1
C. References.....1-3
D. Elements of Underground Electrical Inspections.....1-3

Chapter 2 General.....2-1
A. Guidelines for Determining Portable, Mobile, and Stationary Electric Equipment Located on the Surface.....2-1
B. Guidelines for Permitting Nonapproved Hot Air Heating Units for Hazardous Locations on the Surface.....2-1
C. Surface Transformer Station Guidelines.....2-2
D. Lightning Arresters.....2-3
E. Lightning Arrester Ground Fields.....2-3
F. Methods and Examples of Determining Cable and Conductor Capacities.....2-3
G. Procedures for Determining the Overcurrent and Short Circuit Protection of Electric Equipment and Circuits.....2-6
H. Electrical Switch Evaluation Criteria.....2-7
I. Underground Inspection Procedures for Damaged Power Wire Insulation.....2-8
J. Procedure for Inspection of the Operator's Electric Equipment Maintenance Program.....2-8
K. Additional Procedures for the Power Distribution Products, Inc. (PDP) Safety Circuit Tester.....2-9

Chapter 3 Permissible Electric Equipment.....3-1
A. Inspection Procedures.....3-1
B. Field Modification Procedures.....3-4
C. Field Modification Reports.....3-4
D. District Field Changes.....3-4
E. Silicon Diode Grounding Circuits Test Procedures.....3-6
F. Intermachine *Arc* Suppressing Device Testing Procedures.....3-7
G. Guidelines for Inspecting Lighting Systems.....3-9
H. How to Take Light Readings with a Photometer.....3-15

Chapter 4 Trailing Cables.....4-1
A. Short Circuit Protection: Underground Trailing Cables.....4-1
B. Short Circuit Protection: Surface Trailing Cables.....4-1
C. Mechanical Protection.....4-2
D. High-Voltage Splice Inspection Procedures.....4-2
E. Splice Evaluation Criteria: Surface Trailing Cables.....4-2
F. Permanent Splices: Underground Trailings Cables Inspection Procedures.....4-2

Chapter 5 Grounding 5-1
A. Metallic Frames and Enclosures: Surface Equipment 5-1
B. Metal Battery Cnnnector Housings During Charging.. 5-1
C. Purpose of Grounding Resistor 5-2
D. Resistance Grounded Circuits and Equipment 5-3
E. Grounded-Phase Protection for All Circuits of a Resistance-Grounded System 5-5

Chapter 6 Ground Check Monitor Test Procedures 6-1
A. High-Voltage 6-1
B. Low- and Medium-Voltage 6-2

Chapter 7 High-Voltage Circuit Breakers 7-1
A. Protective Devices 7-1
B. Undervoltage Protection 7-1
C. Grounded-Phase Protection 7-1
D. Sizing Current Transformer to Relay Burden 7-2
E. How to Calculate Short Circuit Protection 7-3
F. How to Calculate Overcurrent Protection 7-3
G. Testing Methods 7-6
H. General Safeguards for Testing 7-8
I. Safeguards for Testing Totally Enclosed Substations 7-8
J. Safeguards for Testing Open-Type Substations 7-10
K. Remember, When Testing High-Voltage Equipment 7-11

Chapter 8 Guidelines for Determining Overcurrent Protection of Trolley Wires and Trolley Feeder Wires 8-1
A. Determining Track and Trolley Wire Resistance 8-1
B. Determining the Internal Resistance of a Rectifier 8-2
C. Calculating Available Short Circuit Currents in Stub-Feed Systems 8-3
D. Simplified Method for Determining Available Short Circuit Currents in Stub-Feed Systems 8-4
E. Calculating Available Short Circuit Currents in Multiple-Feed Systems 8-4
F. Load-Measuring and Voltage-Differential Circuits 8-9
G. Trolley System Testing Procedures 8-9
H. Movement of Off-Track Equipment 8-9

Appendices

Appendix A — Ampacity tables for portable cords, portable power cables, and mine power cables manuf actured in accordance with the Insulated Cable Engineers Association (ICEA) Standards

Appendix B — Ampacity tables for power conductors from the National Electrical Code, 1968

Appendix C — Full-load currents in amperes, direct current motors

Appendix D — Minimum requirements for short circuit and overload protection for motors and motor circuit conductors

Appendix E	Acceptable compounds and materials for lining and insulating battery-box covers and cable reels
Appendix F	MSHA-accepted ground wire devices for low and medium voltage
Appendix G	Glare suppression materials approved as of June 30, 1982
Appendix H	Continuous ampere ratings and magnetic trip ranges/adjustment positions for common molded case circuit breakers
Appendix I	Resistance values for trolley wires, trolley feeder wires, parallel feeder wires, parallel combinations of trolley wires and trolley feeder wires and the values for track and parallel combinations.

Chapter

1 Introduction

A. Inspection Schedules

Many of the requirements of 30 CFR 75.500 through 75.1003 and 30 CFR 77.500 through 77.906 are very technical in nature and a thorough knowledge of electrical theory, mine power systems and electric equipment is essential if inspection personnel are to properly implement these requirements without creating hazards to themselves or to miners. When coal mine inspectors encounter electrical problems involving high voltage protection, grounding problems other than a lack of grounding conductors, or other problems that require special electrical expertise, the assistance of an electrical engineer or coal mine inspector (electrical) should be requested. The request should be forwarded through the inspector's immediate supervisor and should outline the nature of the problem with as much background information as possible.

During each electrical inspection, the electrical inspector or engineer shall inspect an adequate portion of the electric circuits, electric equipment, and mechanical equipment at each mine to ascertain that the equipment and circuits are being maintained in accordance with the Federal Mine Safety and Health Act of 1977 (Mine Act). If the electrical inspector or engineer determines that the maintenance program at the mine is not adequate to maintain compliance with the Mine Act, the inspector shall make a complete electrical inspection of the mine. During each electrical inspection, every effort shall be made to insure that management has established an examination and maintenance program (30 CFR 75.512 and 30 CFR 77.502) for electric equipment that will insure compliance with the requirements of the Mine Act so that the equipment and circuits will not be installed in an unsafe manner or be allowed to deteriorate into an unsafe condition.

Improvements in electrical technology in the coal mining industry and the corresponding need for greater expertise by electrical engineers and electrical inspectors require electrical inspection personnel to continue their education in this technology. Therefore, each electrical engineer and electrical inspector shall be retrained annually and shall keep abreast of the latest development in coal mining electrical technology by studying reference material, technical publications, and text books and by attending seminars pertaining to electrical technology.

B. Preparation for Inspection — Equipment and Supplies

The following equipment and supplies are required for electrical inspections:

- ☐ Permissible methane detector
- ☐ Measuring rule
- ☐ Lamp belt with attached identification check

- ☐ Set of flat feeler gauges (0.003, 0.004, 0.005, 0.007 and 0.009 inch)
- ☐ Set of round feeler gauges (0.007, 0.009 and 0.011 inch) Note: If round feeler gauges are not available, flat feeler gauges can be ground down to 0.0 inch in width at the tip, tapering to 0.125 inch in width 1.25 inches from the tip. (Use a smooth grindstone, and keep the metal cool while grinding.)
- ☐ Protective hat
- ☐ Safety shoes and safety rubber boots
- ☐ Eye protection
- ☐ Self-rescuers (both 1-hour and self-contained)
- ☐ Notebook, pencil, ballpoint pen
- ☐ Proper Authorized Representative card and identification check
- ☐ Copies of the Federal Mine Safety and Health Act of 1977, Title 30, the MSHA Program Policy Manual, CMS&H General Inspection Procedures Handbook
- ☐ Forms for citations and orders
- ☐ Belt speed indicator (available at MSHA field offices
- ☐ DuPont Model 101 Blaster's Multimeter and one other multimeter such as the Simpson Model 260 or the Triplett Model 310 (with attachable amp-probe)
- ☐ Set of tong-type ammeters (0 to 1,000 amperes)
- ☐ Earth-resistance tester (Biddle, Vibraground, or equivalent)
- ☐ High-voltage gloves with leather protectors (20,000 volts)
- ☐ Low-voltage gloves (1,000 volts)
- ☐ Caliper rule
- ☐ Methane Monitor Test Kit with approximately 2.5 methane-air mixture (Purge Calibrator Kit, Part No. 1400150, National Mine Service Company, or equivalent) with adapters for all types of monitors
- ☐ Millivolt meter
- ☐ AC voltage detector (Tic-Tracer)
- ☐ Padlock and hasp extender
- ☐ Safety belt
- ☐ Binoculars
- ☐ Wire size gage
- ☐ Resistance tester (Biddle or equivalent)
- ☐ Electrician's Vest Pocket Reference Book by Hansteer (Prentice-Hall, Incorporated)
- ☐ Adequate technical reference material should be available at each district, subdistrict, and field office for the use of electrical engineers and electrical inspectors and should include the following publications:

  Industrial Power Systems Handbook by Beeman (McGraw-Hill)

  National Electrical Code, 1968, 1971, 1975, 1978, 1981

  Standard Handbook for Electrical Engineers by Fink and Carroll(McGraw-Hill)

  NFPA Handbook of the National Electrical Code, Fourth Edition (McGraw-Hill)

General Electric Distribution Transformer Manual, Publication GET-2485B

C. References

1. *IEEE Red Book*. Recommended Practice for Electric Power Distribution for Industrial Plants - IEEE Standard 141-1976

2. *EEE Green Book*. Recommended Practice for Grounding Industrial and Commercial Power Systems – IEEE Standard 142-1972

3. *IEEE Buff Book.* Recommended Practice for Protection and Coordination of Industrial and Commercial Power Systems – IEEE Standard 242-1975

4. *IEEE Standard Dictionary of Electrical and Electronic Terms* – IEEE Standard 100-1972

5. NSI A17.1-1978 Elevators, Dumbwaiters, Escalators, and Moving Walls.

6. ANSI A17.2-1979 Inspectors Manual

D. Elements of Underground Electrical Inspections

Electrical inspections shall include at least the following elements:

1. Surface

a. Map of the electrical system
b. List of qualified electricians
c. Records of monthly circuit breaker tests
d. Records of weekly examinations of electric equipment

2. High-Voltage Installations Supplying Underground Circuit

   a. Transformers and connections
   b. Grounding resistors and connections
   c. Ground fields
   d. Frame grounding of transformers, circuit breakers, etc.
   e. Lightning protection
   f. Visible disconnecting switches
   g. Circuit breakers
      1) Overcurrent relays
      2) Current transformer ratios
      3) Ground check circuits
      4) Ground fault relays
      5) Undervoltage relays

3. Low- and Medium-Voltage Installations Supplying Underground Circuits

   a. Direct and derived neutral
   b. Grounding resistors
   c. Circuit breakers and associated relaying
   d. Lightning protection
   e. Visible disconnecting switches
   f. Ground check circuits

4. Underground High-Voltage Circuits

   a. Type and capacity of cables
   b. Splices, terminations, and couplers
   c. Visible disconnecting devices
   d. Circuit identification
   e. Mechanical protection for cables
   f. Power centers, transformers, and rectifiers

5. Trolley and Direct-Current Circuits

   a. Ampacity of conductors
   b. Splices and track bonding
   c. Cutout switches
   d. Short circuit and overload protection
   e. Guarding of trolley and trolley feeder wires
   f. Condition of track rails
   g. Insulation of conductors
   h. Record of 6-month calibration

6. Underground Low- and Medium-Voltage Circuits

   a. Ground circuits
   b. Ampacity of conductors
   c. Circuit breakers and associated relays

d. Circuit identification
e. Visible disconnecting devices

7. Stationary Electric Equipment

a. Overload and short circuit protection
b. Frame grounding
c. Safe operating controls
d. Cables and wiring, fittings, insulators
e. Fire protection
f. Cleanliness of equipment
g. Permissibility of equipment in face areas and return airways

8. Mobile Equipment

a. Overload and short circuit protection
b. Frame grounding (offtrack equipment)
c. Safe Operating controls
d. Cables and wiring, entrance glands, mechanical protection
e. Fire protection
f. Cleanliness of equipment
g. Sand rigging
h. Brakes
i. Lights
j. Permissibility of equipment in face areas and return airways

9. Trailing Cables

a. Condition of outer jacket, conductor insulation and splices
b. Short circuit protection
c. Size of dual element fuses
d. Trip element and setting of circuit breakers
e. Visible disconnecting devices
f. Identification of cables
g. Continuity of grounding conductors
h. Mechanical protection

10. Illumination of Working Places

a. Statement of test and evaluation
b. Compliance with 30 CFR 75.1719
c. Maintenance of illumination systems.

Chapter

2 General

A. Guidelines for Determining Portable, Mobile, and Stationary Electric Equipment Located on the Surface

If electric equipment is capable of moving under its own power, the equipment is considered to be mobile equipment. Mobile electric equipment include stripping shovels, draglines, drills, coal loaders, etc.

If the equipment is occasionally moved or could be readily moved from one place to another, the equipment is considered to be portable equipment. Portable electric equipment also generally receives its power through a portable cable (trailing cable) or portable cord and should not be moved while energized. All equipment that is not wired in a permanent manner shall be considered to be portable and also may be mobile. Examples of portable electric equipment include electric hand tolls, electric pumps and air compressors that receive power through a portable cable and are designed to be moved from place to place in a strip pit, electric welders which receive power through a portable cable and are designed to be moved from place to place in a preparation plant or onboard a unit of mobile electric equipment, etc., and a skid mounted substation that receives its power through a portable cable.

If the electric equipment is installed in a fixed location and is wired in a permanent manner, the equipment is considered stationary equipment.

Examples of stationary electric equipment include pendant type lighting fixtures even though the fixtures are suspended from the ceiling by a portable cord; electric welders that are installed in a fixed location and are wired with a permanent wiring method, e.g., flexible metal conduit, nonmetallic sheathed cable, etc,; electric pumps that are installed in a fixed location in a preparation plant and are wired with a permanent wiring method; and a skid mounted substation that is installed and grounded in a permanent manner and receives its power directly from an overhead power line.

Certain electric equipment, e.g., rail-mounted and pivoting coal stackers, traveling shop cranes, small traveling hoists on I beams, etc., cannot be strictly classified as portable, mobile, or stationary. For the purposes of circuit protection and system and enclosure grounding, such equipment shall be considered stationary.

B. Guidelines for Permitting Nonapproved Hot Air Heating Units for Hazardous Locations on the Surface

The Mine Safety and Health Administration (MSHA), as the enforcement Agency, in accor-

dance with Article 90-4 of the National Electrical Code (NEC), can permit alternate methods, other than approved (explosion-proof) heaters, for heating large hazardous locations. These other methods of using nonapproved hot air heating units located outside the hazardous location are permitted only if they include at least the following safety precautions and devices:

1. The heating unit shall be located outside the hazardous location and connected by at least 5 feet of horizontal air ducting between the heating unit and the hazardous location. Air ducting systems shall be designed to prevent accumulations of dust within the air ducts.

2. Flame heating units shall contain a sealed combustion chamber with no direct flame or combustion gases entering the air stream to the hazardous location. Electric heating elements may be placed directly in the air streams.

3. Air in the ducting shall not exceed 150 degrees Celsius at the point where the ducting enters the hazardous location.

4. All makeup air for the heating unit shall be from a clean outside location and filtered to keep out dust, leaves, and other combustible material. For example, the air will not be obtained from an outside dusty location nor will any air be recirculated from the hazardous location to the heating unit.

5. The heater shall have a purge cycle that provides at least six air changes in the heating unit and in that portion of the air duct between the heating unit and the hazardous location before ignition of flame or energization of electric heating elements.

6. A spark arrester must be provided in the air duct within 18 inches outside of the point where the air duct connects to the heating unit. The spark arrester shall be made of a substantial heat and corrosion resistant metal with 1/8-inch or smaller openings. The spark arrester installation shall facilitate frequent inspection and necessary replacement.

7. A back draft damper shall be provided within 18 inches outside of where the air duct enters the hazardous location. The damper must close automatically when there is no forward air movement in the air duct.

8. If the area being heated is a Class I hazardous location, a gas vent of at least 2 square inches must be provided at the highest point in the ducting between the heating unit and the hazardous location. This vent may be provided with a damper that closes when the heater is in operation. However, this damper must open automatically when there is no forward air movement in the duct.

Because of the many different conditions and combinations of hazardous locations and heating units, providing the above safety precautions does not ensure that an alternate heating method will be permitted by MSHA. Each installation must be inspected by MSHA before it is accepted. To have a reasonable assurance that a system will be acceptable after installation, it is recommended that plans for each installation be reviewed with the electrical supervisor in the district in which the installation is to be made before installation.

C. Surface Transformer Station Guidelines

The interior of transformer stations, both in a fenced enclosure or transformer vault or house, must be designed to prevent any person from inadvertently contacting energized parts. Therefore, all wiring and other exposed energized parts must be installed at least 8 feet above the work area or walking surface. Otherwise the wiring, transformer bushings, or other exposed parts must be properly guarded to prevent accidental contact. Conductor insula-

tion is not acceptable in lieu of guarding in high-voltage installations. Shielded cable may be considered as guarding.

Shock hazards, such as exposed energized parts or conductors that a person could accidentally contact in a high-voltage substation, are a violation of 30 CFR 77.509(b).

D. Lightning Arresters

The voltage rating of lightning arresters is based on the maximum circuit voltage and the degree of the system's neutral grounding. Consequently, the rating of lightning arresters used on power systems in which the neutral is ungrounded or grounded through an impedance (including resistance-grounded power systems) should be based on the maximum phase-to-phase voltage of the system.

Lightning arresters designed for use on AC power systems are not generally suitable for service on DC systems, since the means employed to interrupt follow current is not effective where this current does not periodically pass through zero. Arresters, however, are available for DC service. Modern DC arresters are simply capacitors. They are connected from line to ground and limit the crest value of a voltage surge by absorbing the current as a charge on the capacitor. A chart that helps in determining proper arrester application for three-phase circuits is shown on Page 316 of the Industrial Power Systems Handbook by Beeman (McGraw-Hill).

E. Lightning Arrester Ground Fields

Lightning arrester ground fields shall be maintained with as low a resistance to earth as possible, preferably less than 5 ohms and never more than 25 ohms. The separation of lightning arrester ground fields from neutral ground fields prevents lightning surges from being transmitted to the neutral ground field where they could momentarily energize the frames of equipment grounded to the neutral ground field. (See Figures 1 and 2.)

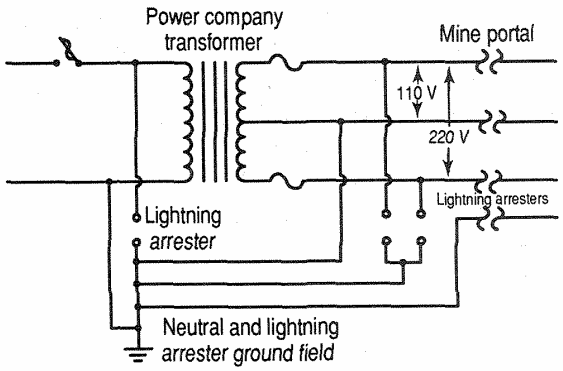

Figure 1.—Unacceptable lightning arresters for single-phase circuits. Single-phase circuits, such as the one shown above, are not acceptable to supply power to underground loads since the neutral and lightning arrester grounds are not separated by at least 25 feet.

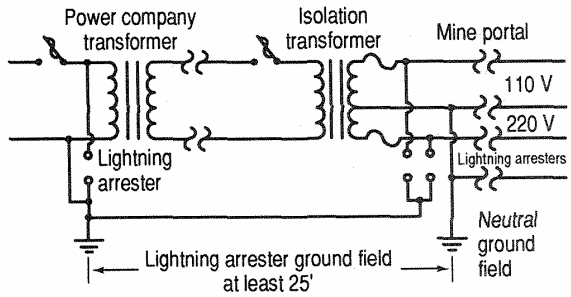

Figure 2.—Acceptable lightning arresters for single-phase circuits. This circuit, with an isolation transformer installed, is acceptable since the neutral and lightning arrester grounds are separated by at least 25 feet.

F. Methods and Examples of Determining Cable and Conductor Ampacities

Whenever the standards of 30 CFR Part 77 are applicable, they shall be used to determine compliance. If Part 77 standards and the NEC are in conflict, Part 77 standards will be applied.

While 30 CFR 77.503 states general ampacity and conductor size requirements, 30 CFR 77.503-1 incorporates the specific minimum requirements. The ampacity tables for insulated conductors other than trailing cables used on the surface and manufactured in accordance with minimum NEC standards, or insulated conductors that meet the more general safety test

ductors that meet the more general safety test of 30 CFR 77.506-1 requires circuit breakers and fuses to meet the minimum requirements of the 1968 NEC. For certain excavation equipment, requiring strict compliance with the terms of the 1968 NEC could prevent the use of circuit protective devices of appropriate type and capacity. Therefore, 30 CFR 77.506-1 should not be applied to equipment that meets the requirements of 30 CFR 77.506.

Alternating-and direct-current loop (feedback) systems and their controls that are used on large shovels, draglines and in-mine hoisting installations are normally designed so that their currents are limited to values below those which would cause a harmful overload condition to circuits or motors. These circuits on the equipment specified above comply with 30 CFR77.506 and will not be required to have short circuit or overload protective devices to comply with the terms of the NEC.

The following discussion does not apply to trailing cables or on-board cables of permissible equipment.

Insulated Cable Engineers Association (ICEA) ampacity tables for portable cords, portable power cables, and mine power cables with insulation temperature ratings of 70 degrees Celsius, 75 degrees Celsius, 85 degrees Celsius, and 90 degrees Celsius are included in Appendix A to this handbook (Tables A-1 through A-6). Portable cords such as types S, SO, ST, STO, SJ, SJO,SJT, SJTO, and portable power cables and mine power cables such as types G,C-GC, W, SH, SHG-GC, SHD, SHE-GC, MP, and MP-GC are considered to be manufactured in accordance with ICEA standards. It should be noted that these ampacity tables have been calculated for a 20degree Celsius ambient temperature, which is generally considered the temperature of an underground coal mine. The correction factors listed in Table A-7 should be used to correct the ampacities at 20 degrees Celsius to the prevailing ambient temperature.

When power conductors are not manufactured in accordance with ICEA standards, the ampacity tables in Appendix B to this handbook from the 1968 NEC shall be used. The 1968 NEC contains the following tables: the allowable ampacities for copper conductors (Tables 310-12 and 310-13). The allowable ampacities for aluminum conductors (Tables 310-14 and 310-15). Tables 310-12 through 310-15 appear as Tables B-1 through B-4, respectively, in Appendix B of this handbook. Table B-5 provides ampacity correction factors for ambient temperatures over 30 degrees Celsius.

Conductors supplying in a single motor shall have an ampacity not less than 125 percent of the full-load current rating of the motor (Section 430-22 of the NEC). The ampacity of conductors for a motor used for short-time, intermittent, periodic, or varying duty shall be calculated according to Table 430-22(a).

Conductors carrying the secondary current of a wound-rotor shall have an ampacity not less that 125 percent of the full-load secondary current of the motor (Section 430-23 of the NEC). Conductors supplying two or more motors shall have an ampacity equal to the sum of the full-load current ratings of all the motors, plus 25 percent of the highest rated motor in the group (Section 430-24 of the NEC). Where one or more motors of a group of motors are used for short-time, intermittent, periodic, or varying duty, the ampacity of the conductors shall be calculated according to Section 430-24(a), (b), and (c) of the NEC.

Section 430-6(a) of the 1968 NEC requires that the values of motor full-load current that are used in calculating motor circuit conductor ampacity and motor circuit overcurrent (short circuit) protection be taken from Tables 430-147 through 430-150 rather than the motor nameplate. However, the full-load current on the motor nameplate shall be used in determining mining motor overload protection. Tables 430-147 through 430-15- appear as Tables C-1 through C-3, respectively, in Appendix C of this handbook.

Example: Determine the size of copper conductors (75 degree Celsius insulation) required for one 25-horsepower squirrel cage induction motor and two 60-horsepower wound-rotor induction motors on a 460-volt, three-phase, 60-hertz supply. The full-load secondary current of the wound-rotor motors is 84 amperes. The cable of the 25-horsepower motor is a conventional three-conductor, 75 degree Celsius, THWN (thermoplastic insulation) copper conductor cable. The cables to the two 60-horsepower motors and the feeder cable are manufactured in accordance with the ICEA standards for copper conductor, 75 degree Celsius insulation, three-conductor cables. The mine ambient temperature is 20 degrees Celsius. A sketch of the circuit is shown in Figure 3.

Solution: The full-load current of the 25-horsepower motor is 34 amperes (Table C-3). A full-load current of 34 amperes requires conductors with an ampacity of 42.5 amperes (Section 430-22 of the NEC).

34 amperes x 1.25 = 42.5 amperes

By using Table B-1 (Table 310-12 of the 1968 NEC), it can be determined that a No. 8 AWG, three-conductor cable with 75 degrees Celsius insulation has an ampacity of 45 amperes. Since this ampacity exceeds the required 42.5 amperes, the No. 8 AWG cable is of sufficient size for this application. Note that the next smaller cable, No. 10 AWG, would not have a sufficient ampacity (30 amperes).

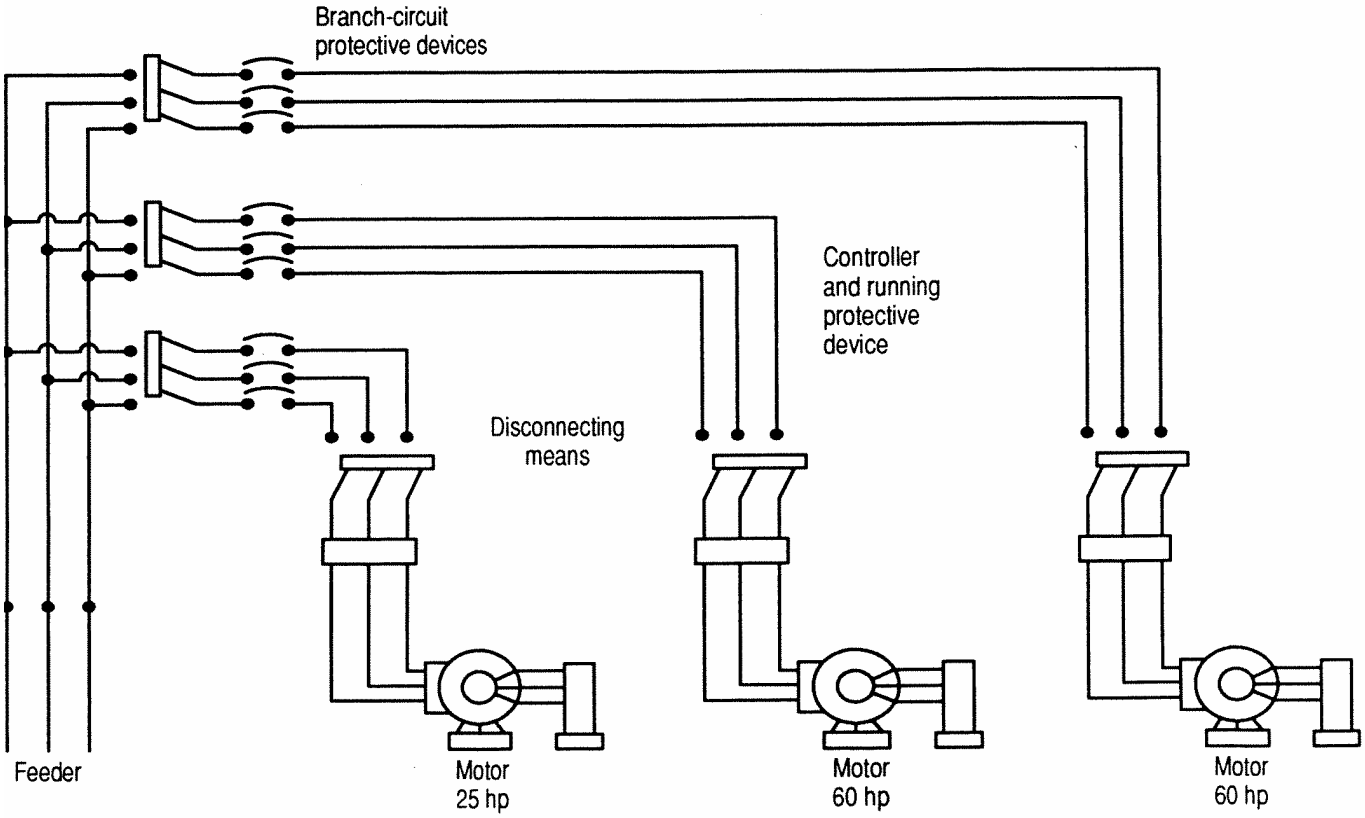

Figure 3. –Circuit sketch for problem in determining adequate conductor size.

The full-load current of each 60-horsepower motor is 77 amperes (Table C-3). A full-load current of 77 amperes requires conductors with an ampacity of 96.25 amperes (Section 430-22 of the NEC).

77 amperes x 1.25 = 96.25 amperes

The ampacity of a No. 4 AWG, 75 degree Celsius, three-conductor cable, from Table A-1 is 106 amperes at a 20 degree Celsius ambient temperature. Since the 106 ampere ampacity of the No. 4 AWG cable exceeds the required 96.25 amperes, the No. 4 AWG cable is a sufficient size for this application. A No. 6 AWG, 75 degree Celsius, three-conductor cable (81 amperes) does not have the required ampacity.

The full-load secondary current of each 60-horsepower motor is 84 amperes. A full-load secondary current of 84 amperes requires conductors with an ampacity of 105 amperes (Section 430-23 of the NEC).

84 amperes x 1.25 = 105 amperes

Again, a No. 4 AWG, 75 degree Celsius, three-conductor cable manufactured in accordance with ICEA standards with an ampacity of 106 amperes at 20 degree Celsius ambient (from above) would be of sufficient size for this application.

The feeder conductor ampacity must be equal to the sum of the motor full-load currents plus 25 percent of the full-load current of the largest motor (Section 430-24 of the NEC). Thus:

77 amperes, 60-horsepower motor
77 amperes, 60-horsepower motor
34 amperes, 25-horsepower motor
\+ 19.25 amperes, 25 percent of 60-hp motor

207.25 amperes, feeder capacity

The ampacity of a No. 2/0 AWG, 75 degree Celsius, three-conductor cable from the ICEA table (Table A-1) is 213 amperes at a 20 degree Celsius ambient temperature. Since the 213 ampere ampacity of the No. 2/0 AWGH cable exceeds the required 207.25 amperes, the No. 2/0 AWG cable is a sufficient size for this application. Note that a 1/0 AWG, 75 degree Celsius, threeconductor cable would not have the required 207.25 ampere ampacity.

G. Procedures for Determining the Overcurrent and Short Circuit Protection of Electric Equipment and Circuits

Short circuit protection shall be provided at the beginning of each feeder and branch line unless an interrupting device located in the same circuit outby the beginning of the branch line will deenergize the circuit when a short circuit occurs. Overload protection may be provided at the beginning or end of a branch line. The proper values of overcurrent and short circuit protection shall conform to the appropriate tables of the 1968 NEC. The protective devices may be either automatic circuit-breaking devices or fuses. The proper trip setting or fuse rating to protect electric circuits is based on the wire size, the type of conductor insulation, and the number of conductors assembled in a cable or conduit. Short circuit and overload protection for electric equipment is based on the full-load current rating, the circuit voltage, and a consideration of inrush or energizing currents.

A fuse or an overcurrent trip unit of a circuit breaker shall be provided for each ungrounded power conductor. Therefore, I, direct-current systems that are either ungrounded or in which a resistance grounded neutral point is provided, protective elements shall be provided for both positive and negative lines. This necessitates the use of either a two-pole circuit breaker or a fuse in each polarity.

Thermal devices in line starters and circuit breakers protecting motors contain heater elements that respond to the heat generated by the flow of current; they shall be rated at values not in excess of those specified in the 1968 NEC and shall be designed to interrupt the motor circuit when any phase is overloaded. It should be noted that the rating of a motor heater element will vary with the type and size of the starter (controller) in which the element is installed. Some heater charts published by manufacturing companies include the motor full-load current factor (115 percent to 140 percent) in their

charts. If this is the case, select the proper motor heater directly from the manufacture's charts using the motor nameplate full-load current rating. An adjustable instantaneous trip circuit breaker may be installed at the beginning of such branch circuit to provide short circuit and grounded phase protection. Such circuit breaker should be set just above the starting current of the motor and not more than 7800 percent of the full-load current of the motor; however, if the motor will not start, the NEC allows a higher setting sufficient to start the motor that shall not exceed 1300 percent of the full-load current (Section 430-52). Circuit breakers with a time delay may also be used to provide short circuit protection for motor branch circuits, provided the circuit breaker is rated at not more than 400 percent of the full-load current of the motor.

1. Exception: Twenty-five feet of cable or wire that is smaller in size than the power feeder cable may be permitted to connect the circuit breaker of fused switch box to the feeder circuit under the following conditions (Section 240-15 of the NEC):

   a. The smaller conductor shall have an ampacity at least on-third that of the conductor from which it is supplied.

   b. The smaller conductor shall be protected from physical damage, such as, installed in conduit.

   c. The smaller conductors shall terminate in a single circuit breaker or set of fuses that will limit the load to that allowed in Tables A-1 through A-4.

2. Conditions of noncompliance: The following conditions shall constitute noncompliance with this section and require corrective action:

   a. failure to provide either a fuse or automatic circuit breaker to protect wiring and equipment against overloads and short circuits;

   b. the use of rated ruses or circuit breaker settings that are greater than those specified in the 1968 NEC; or

   c. defective circuit breakers or line starters, improperly adjusted circuit breakers, fuse ratings too high for a particular application, and improper heater elements in line starters.

The tables in Appendix D to this handbook show the minimum wire size, the maximum instantaneous branch circuit protection and the maximum overload (running) protection for the more common motor sizes encountered in coal mining installations. The wire size is based on 75 degree Celsius insulation. If higher temperature insulation is used, higher ampacities must be allowed in accordance with the tables in Appendix A or Appendix B.

H. Electrical Switch Evaluation Criteria

All electric equipment must be equipped with a suitable means of starting, stopping, and deenergizing. Devices used to accomplish these features must be properly ratd, well-built both electrically and mechanically, and properly installed, maintained, and used.

A switch is a device for opening and closing or changing the connection of an electric circuit and is not normally designed to interrupt short circuit current, although some devices such as molded case and oil-circuit breakers may be used as short circuit protective devices and may serve as switches, also. Examples of devices used as switches include drum controllers, motor controllers, knife switches, air break switches, snap switches, circuit breakers, limit switches, disconnect switches, foot switches, oil switches, float switches, pushbutton switches, proximity switches, reversing switches, and selector switches, Switches may be operated manually, or by electromagnets such as motor controllers, by motors such as oil-circuit breakers, or by solenoids.

Evaluation of the switch must include the following:

1. Evaluation of the design

   Verify that the device is rated for the circuit voltage, current, and horsepower (if applicable) and perform the function for which it was intended.

2. Evaluation of the construction

   Verify that the switches are constructed with proper electrical and mechanical strength.

3. Evaluation of the installation

   Verify that the switches are installed where they are accessible for use and properly protected against mechanical damage. A switch shall not be used on a circuit having a voltage, current, horsepower, kva rating, etc., that exceeds the specified design rating of the switch. Ratings are normally specified on a plate attached to a switch.

   Switches installed indoors shall be installed in an enclosure at least as good as a National Electrical Manufactures Association (NEMA) Type 1 or NEMA 12 to prevent accidental contact with the enclosed apparatus.

   Switches installed outdoors should be installed in at least a NEMA Type 3R raintight enclosure. (This enclosure also meets the requirements for driptight, splashproof, and moisture resistant.)

   Switches installed in enclosures that are washed occasionally by hosing, such as in a preparation plant, shall be installed in at least NEMA Type 4 watertight enclosure equivalent.

   Switches may not be mounted on the face of live front switchboards and are not intended to be installed in cabinets.

I. Underground Inspection Procedures for Damaged Power Wire Insulation

If an inspector observes a cable with a damaged outer jacket, even though the insulation on the conductors has not been damaged, appropriate action should be taken under 30 CFR 75.517, stating that the cable was not fully protected.

When an inspector observes damaged insulation on jackets in splices of power wires and cables, these defects shall be covered under the appropriate sections of 30 CFR 75.514.75.603, or 75.604.

When 30 CFR 75.517 is cited, the inspector should specify one of the following in the citation:

1. the insulation was not adequate (i.e., the insulation on the conductor is either damaged or missing);

2. the cable was not fully protected (i.e., the outer jacket on the cable is either damaged or missing); or

3. both conditions exist on the cable.

J. Procedure for Inspection of the Operator's Electric Equipment Maintenance Program

The records of such examinations that are kept by the operator should be checked during each regular inspection to determine if they are in order and to assure that the examinations are being made by a qualified person. If an inspector finds that the required examination and t4ests are not being made or not being recorded, a citation shall be issued citing 30 CFR 77.502 or 75.512. If an inspector finds any potentially dangerous conditions on such equipment, a citation of the appropriate section shall be issued. However, under certain conditions, these defects may cause an imminent danger situation and require issuance of a Withdrawal Order covering the affected equipment.

If an inspector finds that wiring of electric equipment is in a rundown condition, with many violations existing on one unit of equipment, a citation should be issued for each violation under the appropriate section of the regulations and the inspector should question the qualified person who made the last examination of that equipment. If there is evidence that thorough and complete examinations are not being made or that the required tests are not being make, a citation should be issued under 30 CFR 77.502 or 75.512, indicating that the examinations and tests are not frequent enough.

If each individual piece of electric equipment is not listed separately and identified with a serial or company number and the location of each unit, and if all dangerous conditions and corrective actions are not recorded, the inspector shall consider the records of the examinations and tests of electric equipment to be in violation of 30 CFT 77.502 or 75.512.

Since may electric-powered tools are not used during the normal production cycle, inspection personnel must make a special effort to ensure that they are examined, tested, and properly maintained as required by this section.

K. Additional Procedures for the Power Distribution Products, Inc. (PDP) Safety Circuit Tester

In addition to the instructions of the safety circuit tester manufacturer, all inspection personnel shall:

1. Reinspect all circuit connections to assure proper circuit connections prior to the circuits being energized; and

2. The universal adapter of the PDP Safety Circuit should only be used to test the round-type pin and sleeve couplers and the large Ensign figure #54 continuous miner couplers and should not be used to test rectangular shaped blade-type receptacles such as the Ensign figures #107 and #64. Rectangular shaped couplers should only be tested with the adapter plugs provided with the test unit.

Chapter

3 Permissible electric equipment

A. Inspection Procedures

Caution: An inspector shall not examine a machine for permissibility until the trailing cable supplying power to the machine has been deenergized. The inspector shall request that the trailing cable supplying power to the machine be disconnected, locked out and suitably tagged before the inspector examines the machine for permissibility.

The inspector shall observe the following items when inspecting permissible-type electric face equipment:

1. Note the type and capacity of trailing cable short circuit protection. Check settings of circuit breakers and the rating of dual element fuses and verify that these devices conform to 30 CFR 75.601-1 and 75.601-3.

2. Check the type, size, electrical rating, length, and condition of trailing cables, and determine if the cable is flame resistant by noting if a Bureau of Mines (USBM), MESA, or MSHA acceptance number is molded into the jacket of the trailing cable.

3. Examine the trailing cable strain clamps for effectiveness and insulation at the entrance to the machine, at each end of a cable leading to a separately detached component, and where a cable exits a battery enclosure.

4. Examine the equipment for broken rollers and sheaves, and determine if they are working properly.

5. Examine the flame-resistant material on spooling devices and cable reels that are not insulated from the machine frames by insulating bushings. Examine the reel closely for holes burned into the collector ring compartment and for sharp edges on flanges that may damage the cable.

6. Check to ensure that the cable reels maintain a positive tension on the trailing cable during reeling and unreeling. Such tension should only be high enough to prevent the machine from running over its own cable. Tension pressure should be adjusted to the manufacturer's specifications.

7. Check to ensure that a temporary splice has not been made within 25 feet of a machine, except on equipment using a cable reel.

8. Check each explosion-proof enclosure for a USBM, MESA, or MSHA certification plate or marking.

9. Check to see if the powered dust collector system on bolting machines is identified by a USBM, MESA, or MSHA approval number.

10. Check the plane flange joints of explosion-proof compartments for excessive openings. (Example: contactor compartments, resistor cases.)

11. Check the step flange joints for excessive openings. (Example: motor end bells.)

12. Check the diametrical clearance of push rods for excessive clearance. (Example: control station.)

13. Check for missing bolts or lock washers on covers of explosion-proof enclosures.

14. Check the breathers in explosion-proof enclosures for cleanliness.

15. Check the inspection covers on motors and contactor compartments for damaged flame paths. If screw-type covers are damaged into the threads, the cover must be replaced.

16. Check all screw-type inspection covers for a means to be secured against loosening.

17. Check for burned holes in explosion-proof enclosures, especially on rubber-tired cutting machines and roof bolters.

18. Examine all cable packing glands for tightness and determine if the packing glands are secured against loosening. Verify that the packing gland is tight against the packing material and still has a clearance of not less than (minimum) 1/8 inch between the packing glands and the stuffing boxes.

19. Verify that cables between machine components are either flame-resistant, as noted by the presence of a USBM, MESA, or MSHA acceptance number on the outer jacket, or are totally enclosed within a flame-resistant hose conduit or other flame-resistant material.

20. Verify that cables between machine components are clamped in place to prevent undue movement and do not contain splices.

21. Examine the condition of mechanical protection for cables, such as guards, conduit hose, and missing or loose hose clamps.

22. Check the headlights for loose or broken lenses, loose packing glands, missing or broken lockwires, and improper assembly.

23. Verify that all headlights, resistance boxes, connection boxes, and other electric components are solidly attached to the frame of the machine and light fixtures are grounded by a grounding conductor.

24. Verify that all circuit breakers and other overload protection devices are maintained in proper working condition. (Opening the main circuit interrupting device on-board the machine should deenergize the complete machine, except the methane monitor and control conductors.)

25. Verity that guards and “safe-off” devices on buttons are maintained in proper working order.

26. Citations citing 30CFR75.503 shall include the approval number of the machine on which the permissibility deficiency is observed. If an approval plate is missing on a machine that is being cited for a permissibility deficiency, the citation should note the absence of the permissibility plate.

27. Check for any unauthorized changes in permissible equipment.

28. Check the equipment for any accumulations of loose coal, float coal dust, or other combustible materials.

29. Determine if the machine is properly frame-grounded or provided with equivalent protection. If separate grounding conductors are used to ground the frames of direct-current-powered equipment, the return and frame ground conductors must be connected to the rail or grounded power conductor by separate clamps. Diode grounding is acceptable only for direct-current-powered equipment receiving power from

direct-current systems having one polarity permanently grounded.

30. Verify that all hose conduit used on machines approved under schedule 2G is flame resistant by noting if the USBM, MESA, or MSHA acceptance number is molded or stamped on the hose.

31. Verify that all mobile equipment that travels more than 2.5 miles per hour is provided with an audible warning device.

32. Verify that all mobile machines are provided with parking brakes, unless design of the driving mechanism will preclude accidental movement of the machine when parked.

33. Verify that a headlight and red light reflecting material are provided on both front and rear of each mobile transportation unit that travels at a speed greater than 2.5 miles per hour.

34. Check to ensure that machines with nameplate ratings from 661 to 1000 volts have a shielded trailing cable or, where a cable reel is employed, the cable insulation is rated a t 2000 volts or more.

35. Check to ensure that battery covers are secured in a closed position.

36. Check battery plugs and receptacles for padlocks or equivalent, explosion-proof properties, or interlock design.

37. Check to ensure that fastenings used for joints on explosion-proof enclosures are not used for attaching nonessential parts or for making electrical connections.

38. Check to ensure that ground wires and pilot wires are separately terminated.

39. Check to ensure that trailing cable is minimum No. 4 for direct-current haulage units, minimum No. 6 for alternating-current haulage units, and minimum No. 14 (with sizes 14 to constructed of heavy jackets) for face equipment.

40. Check to ensure headlights/luminaires are protected from damage by guarding or location.

41. Check to ensure moving parts are guarded to prevent personal injury.

42. Check to ensure that unused cable guard entrances are closed with metal plugs secured by spot-welding, brazing, or equivalent.

43. Check to ensure that headlight/luminaire lenses are held in place with sealing compounds (RTV, epoxy, etc.) using the following procedures.

    a. Finger tap around the perimeter of each lens to determine if the lens bond is intact. If the lens hits the internal metal fastenings (stopper), the bond between the lens and the housing has failed, and the headlight/luminaire needs to be replaced.

    b. If there is no evidence of the lens hitting the stopper, nominal thumb pressure should be applied around the perimeter of each lens while inspecting the bond between the lens and housing. Any separation in the bond between the sealing compound and the lens or between the sealing compound and the housing indicates a failure in the bond, and the headlight/luminaire needs to be replaced.

    c. If any of the sealing compound is missing from between the lens and the housing, the headlight/luminaire needs to be replaced.

Under no circumstances should feeler gages, screw drivers, or pointed objects be used to inspect for separation in the bond since this

practice could adversely affect the original integrity of the bond.

A list of compounds that are acceptable for lining battery-box covers as required by 30 CFR 18.44(b) is included in Appendix E (Table E-1).

A list of materials that are acceptable for insulating cable reels as required by 30 CFR 18.45(e) is contained in Appendix E (Table E-2).

B. Field Modification Procedures

The proposed modification shall comply with the applicable requirements of Part 18 (Schedule 2G), Subpart B (Construction and Design Requirements), and shall not substantially alter the basic functional design that was originally approved for the machine.

The electrical inspector shall inspect each machine listed in an application for a field modification.

The inspection of the machine shall include the following elements:

1. a general inspection of the entire machine to determine if it is being operated in a permissible condition;

2. a detailed inspection of all components and cables listed in the modification bill of materials (components added) and the original machine components that were involved in the modification, including all certified components such as headlights, push-button stations, diffuser fan motors, and the original machine components such as the starter of control station; and

3. a written field modification report giving a description of the modification.

C. Field Modification Reports

The field modification report should consist of a memorandum containing the following:

1. identification of the applicant;

2. a description of the machine;

3. a brief statement that the changes were completed:

   a. as submitted by the operator, or

   b. as submitted by the operator except for ... (identify the changes that were not in agreement with the operator's application); and

4. the finished report should close with the following signed statement:

   The modifications described above have been personally examined by me and are judged not to increase the fire and explosion hazards involved in the operation of this machine in gassy or dusty mines.

   Signed: Date:
   Federal Coal Mine_____ _____
   Inspector or Engineer (Electrical)

   Reviewed by: Date:
   Supervisor _____ _____

D. District Field Changes

The following field changes may be made without sending an application letter to the Approval and Certification Center (A&CC), without processing a written field change report and acceptance letter, and without a visual inspection at the time of installation. However, coal mine operators are required to notify the district or subdistrict office in writing that these changes will be or have been made in accordance with 30 CFR, Part 18. A copy of all notifications shall be maintained in the appropriate mine file. Inspection of such changes shall be made as soon as practicable, but never later than one month after receipt of the notification. A record of such inspection shall be maintained in the mine file.

1. Installation of methane monitors.

2. Field modifications duplicating the original equipment manufacturer's approved design of an essentially identical machine. For example, a shuttle car with approval number 2G-2000 may have been originally approved without an emergency stop switch. Subsequently, the manufacturer filed an application and received approval from A&CC to install a certain switch X/P-1000 on all new shuttle cars, which would bear approval number 2G-2000-1, or the first extension of the original approval. An operator owning a shuttle car with the *original approval 2G-2000 and wishing to* add an emergency stop switch can contact the manufacturer. If the switch X/P-1000 is installed as approved under the first extension, it is not necessary to notify A&CC.

3. Field modifications duplicating previously accepted field changes for machines of the same type and with the same approval number *at the same mine or under the* direction of the same maintenance supervisor(s).

4. Installation of silicon diode grounding equipment in existing explosion-proof enclosures on machines, provided no cable gland openings are made in the machine and provided the installation meets the requirements of 30 CFR 75.703-3(d), which refers to voltage and current ratings and overcurrent protection for such devices.

5. Removal of non-safety-related electrical components from a machine. For example, the relocation of the headlight resistors to the machine control box would eliminate the headlight resistor enclosures. All unused cable entrances must be plugged, and plugs must be secured in place in accordance with Part 18 requirements. (For *example, see Figure 10 of Part 18.)*

6. Changes that are made within explosion-proof enclosures and do not conflict with permissibility requirements. Circuit breakers, overload relays, and fuse protection must be retained as originally approved.

7. Change of trailing cables on machines with cable reels having external trailing cable connections from flat to round or vice versa, from a G to GC or vice versa, and changes to a larger cable size, provided the insulated trailing cable strain clamp still grips the cable properly and provided no changes are made to the entrance glands.

8. Change of trailing cable from G to GC or *vice versa on machines with direct cable* entry into an enclosure.Changes in the physical cable size (outside diameter) require cable entry modification and a field change application and report. Cables that are the same size electrically may not have the same outside diameters due to insulation differences.

9. Change in the length of the trailing cable to *maximum allowable as shown in Table 9 of* 30 CFR, Part 18, if previously approved for that machine.

10. Installation of illumination systems that have been accepted under Statement of Test and Evaluation (STE) or the interchanging of alternate lighting fixtures of STE lighting systems that have been found by A&CC to have similar photometric patterns.

11. Installation of any electrical components of a braking system required by 30 CFR 75.523-3.

12. Insulation of cable reels or battery box lids with material that has been accepted by MSHA.

13. Interchanging of certified headlights that *meet Part 18 requirements and are designed* to accept the same size cable. Replacement lamps in these headlights must be in conformance with the headlight certification.

14. Substitution of a certified battery and tray assembly for an assembly on an existing machine

15. Relocation of electrical components on a machine, provided the interconnecting cables meet the requirements of 30 CFR 18.36(b).

NOTE: Headlights and cables between machine components must be protected from damage by location and/or guarding.

E. Silicon Diode Grounding Circuits Test Procedures

Diode grounding of equipment is not acceptable on direct-current systems which have both the positive and negative polarities ungrounded.

Two suggested procedures of testing silicon diode grounding circuits as required weekly by 30 CFR 75.512 are as follows:

1. Running Test. (Suitable precautions should be exercised during this test to avoid the danger of electrical shock.)

a. Start the pump motor on the machine being tested. Using a resistance, such as a resistance type DC welder set to a low amperage, pass current from ungrounded source to the frame of the machine. Assuming the current flow is higher than the trip-setting of the ground trip relay, the pump motor will stop running if the ground trip relay is operating as it should.

b. Reverse the trailing cable connections. Extreme caution shall be used during this step because the frame of the machine will become energized if the grounding diode is shorted. Check to make certain that the frame is not energized to verify that the grounding diode is functioning as it should. If the frame is found to be energized, proceed to test 2.

c. If the frame is not energized, attempt to start the machine. The machine will not start with the trailing cable connected in reverse if the polarizing diode is operative and properly connected in the control circuit. (See Figure 4.)

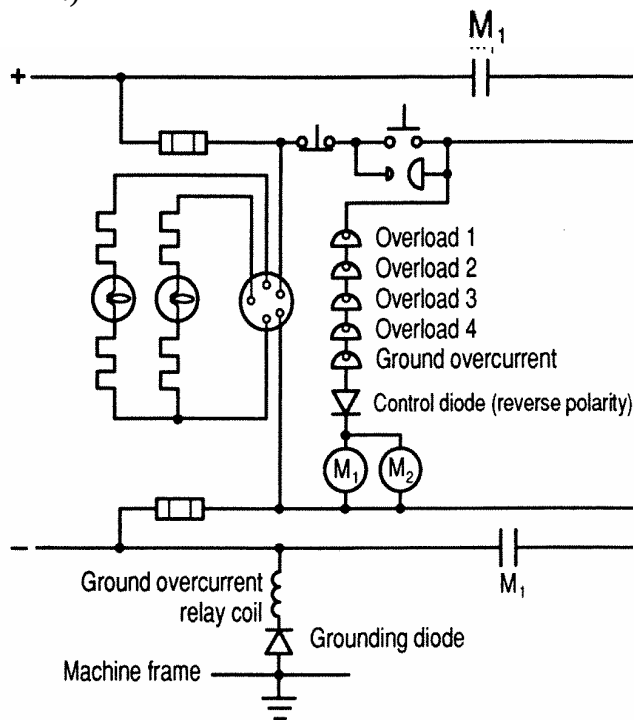

Figure 4.-Control circuitry of a direct-current machine using silicon diode grounding. Silicon diodes must meet all the criteria 30 CFR 75.703.3(d). (Positive trolley)

2. Voltmeter test for rubber-tired equipment. When silicon diodes are used for frame grounding of off-track, direct-current powered equipment, the diode grounding circuit shall be maintained in such manner that not more than .005 amperes of current can flow from the ungrounded power conductor to the equipment frame when the polarity of the trailing cable is inadvertently reversed.

The procedure for determining if diodes will pass more than .005 amperes of leakage current is as follows:

a. Reverse the trailing cable connections.

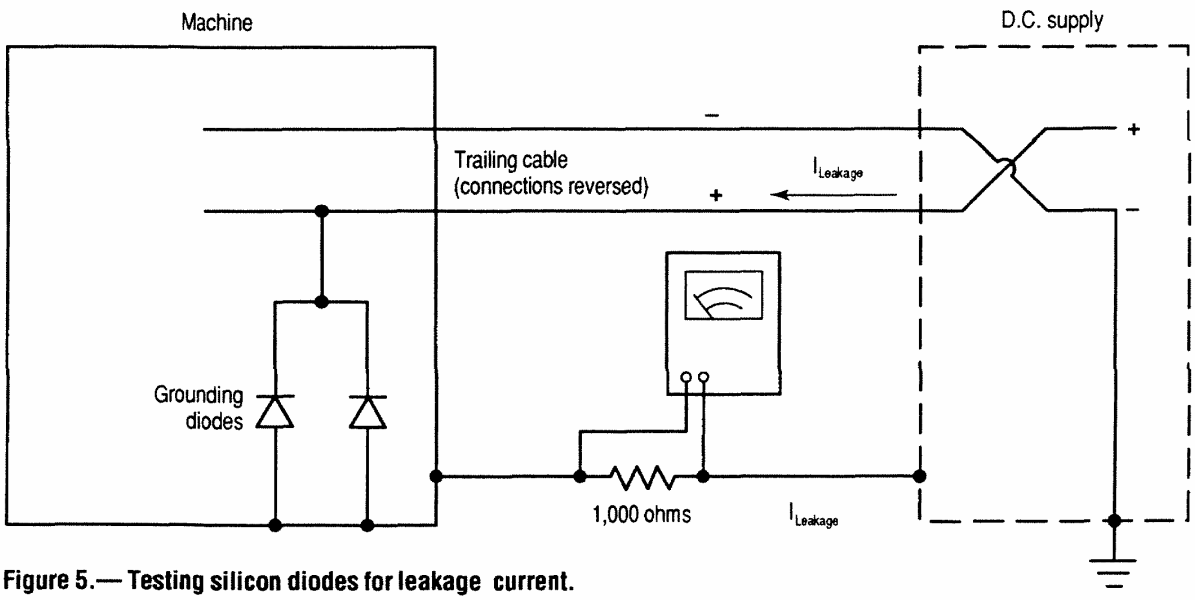

Figure 5.— Testing silicon diodes for leakage current.

b. Connect a Simpson Model 260 multimeter (20,000 ohm/volt) in shunt to a 1,000 ohm resistor as shown in Figure 5.

c. Turn the voltmeter selector switch to the 10-volt scale.

d. Measure the voltage across the 1,000 ohm resistor on the Simpson 260 meter. The voltage reading is (Ohm's Law V = IR) the diode leakage current multiplied by the 1,000 ohm resistor.

e. A voltage reading in excess of 5 volts will indicate that the diode under test is passing excessive reverse current and shall be replaced.

f. Test the overload relay by passing the required amount of current through it to cause it to activate.

Inspectors should familiarize themselves with the above testing procedures so that they will be able to determine whether the proper weekly tests are being conducted. During each regular inspection, inspectors should make an effort to be present while a representative number of diode grounding circuits are being tested.

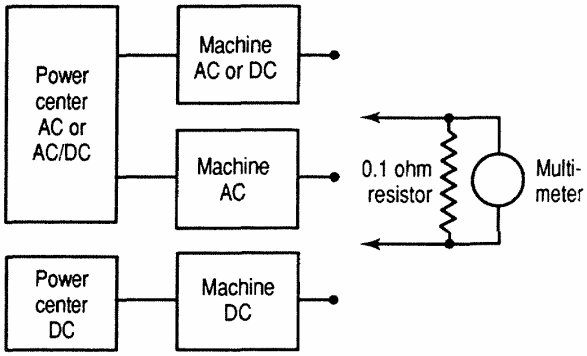

Figure 6A.—Block diagram showing application of the test device for intermachine arc testing.

F. Intermachine Arc Suppressing Device Testing Procedures

Section 75.524 is designed to prevent incentive arcing between the frames of different units of electric face equipment that normally come in contact in the working places or in return air by establishing the maximum acceptable level of electrical energy that can exist between the frames of any two such machines.

In general, 30 CFR 75.524 applies to continuous mining machines, loading machines, and haulage equipment transporting coal from these machines.

Electrical inspectors shall take measurements to determine compliance with this section in the following manner:

1. Connect a 0.1 ohm 10 watt 1 percent tolerance resistor between the two machine frames by means of two 6-foot lengths of No. 14 stranded insulated copper wire and two heavy-duty, battery type clips. (See Figures 6A and B.)

2. Connect a DuPont Model 101 Blaster's Multimeter across the resistor. Set the multimeter on the 150 AC or DC millivolt range. Other voltage ranges on this multimeter will not give an accurate reading due to the characteristics of the meter. However, other ranges may be used to approximate the current in the circuit.

3. Start each motor on the machine in its proper sequence.

4. If, at any time, the meter deflection exceeds 100 millivolts, more than one ampere is flowing through the resistor. However, because of the tolerances of the meter and changes in resistance due to temperature variations, a violation of this section shall not be cited until the meter deflection exceeds 110 millivolts.

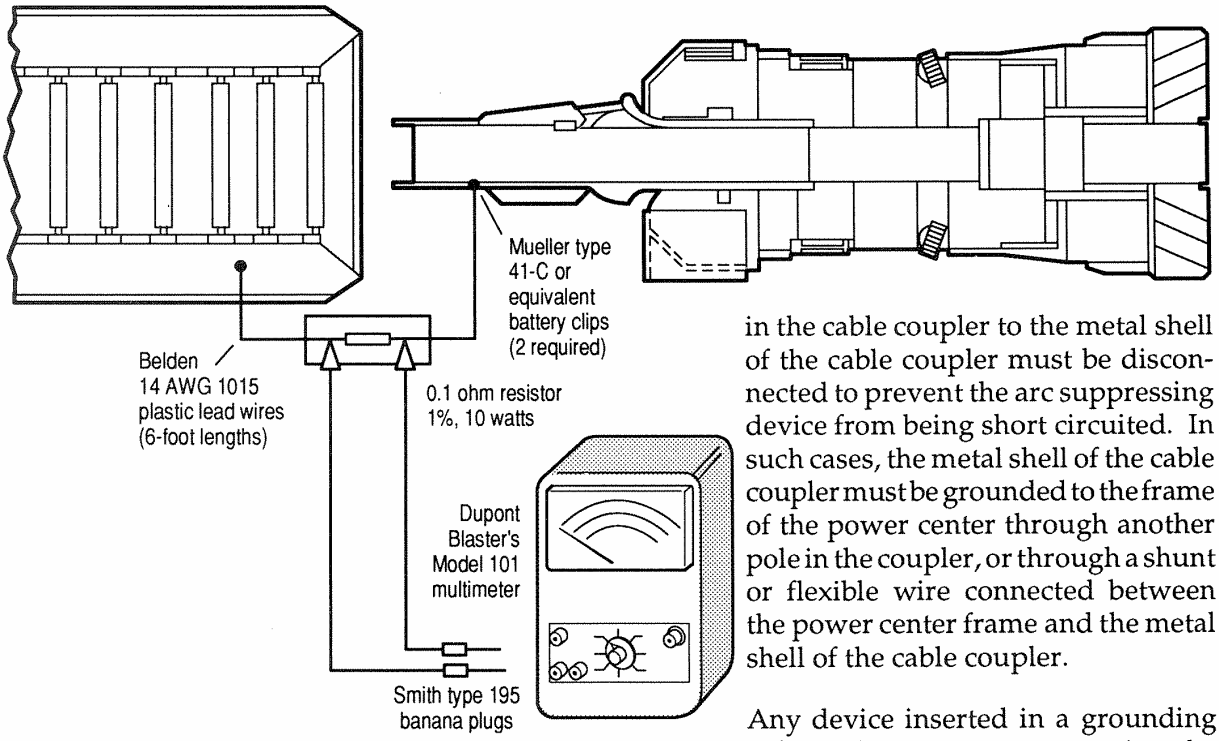

Figure 6B.—Test device for measuring the electric current that exists between any two units of electric face equipment.

If a hazardous voltage is measured, an acceptable arc suppression device can be installed in the grounding circuit. When arc suppression devices are installed in power centers, the grounding connection from the grounding pin in the cable coupler to the metal shell of the cable coupler must be disconnected to prevent the arc suppressing device from being short circuited. In such cases, the metal shell of the cable coupler must be grounded to the frame of the power center through another pole in the coupler, or through a shunt or flexible wire connected between the power center frame and the metal shell of the cable coupler.

Any device inserted in a grounding conductor (including an arc suppression device and a parallel path suppression device) shall have a short circuit capacity that is not less than that of the grounding conductor in which it is installed. MSHA's Office of Technical Support tests such devices to determine their short circuit capacity. A list of devices that have been accepted by MSHA's Office of Technical Support for insertion in grounding conductors is contained in Appendix F of this handbook.

G. Guidelines for Inspecting Lighting Systems

In all instances, when the lighting system is not maintained as specified in the other provisions of the STE (e.g., one or more light fixtures are not burning, light fixtures are not properly oriented or maintained, etc.), measurements shall be taken with a Go/No Go light meter in accordance with 30 CFR 75.1719-3 to determine if a violation exists.

A list of light fixtures and diffusing materials that have been approved by A&CC for use in each light fixture is provided in Appendix G to this handbook. This material, in the quantities shown, may be installed in or on the light fixture without affecting permissibility. Installation of unapproved diffusing material inside or on a light fixture will render the fixture nonpermissible. A&CC will approve the use of diffusing materials other than those listed if it can be demonstrated that excessive heat is not produced and that the material used will not cause deterioration of the light fixture.

1. Instances requiring light measurements: A violation of 30 CFR 75.1719-1(d) shall not be cited without taking light measurements in accordance with the provisions of 30 CFR 75.1719-3. Light measurements shall be taken to determine if the specified surfaces are illuminated to 0.06 footlamberts in the following instances:

   a. No illumination other than miners' cap lamps is provided while self-propelled mining equipment is being operated in the working place.

   b. Coal dust, dirt, or other material is present on light fixtures.

   c. A lighting system is provided while self-propelled mining equipment is being operated in the working place; however, an STE has not been issued for the lighting system.

   d. A lighting system for which an STE has been issued is provided while self-propelled mining equipment is being operated in the working place; however, the system is not installed and operated in accordance with one or more provisions of the STE. Examples of instances in which lighting systems are not installed and operated in accordance with the provisions of the STE include:

      1) one or more light fixtures are not burning;

      2) light fixtures are not properly oriented or maintained;

      3) the lighting system is used in working places having dimensions exceeding those specified in the STE;

      4) the lighting fixture's lens are covered with unauthorized material such as brattice cloth or paint; and

      5) the lighting system is not otherwise operated in compliance with all requirements specified in the STE.

   The operator is not required to have an STE; therefore, a citation shall not be issued for failure to comply with an STE. If the STE is not being complied with and in order to issue a citation, the inspector **must take measurements** to determine if the failure to comply with the STE results in a reduction of light below the 0.06 footlamberts required by 30 CFR 75.17191(d).

2. Issuance of citation: When an inspector observes self-propelled mining equipment being operated in a working place, and a lighting system has been installed in accordance with an STE, and all of the provisions of the STE are being complied with as recorded on the metal plate, the lighting system shall be acceptable as being in compliance with 30 CFR 75.1719-1(d) and **the inspector shall not take light measurements.**

When proper light measurements indicate that a violation of 30 CFR 75.1719-1(d) exists, a citation shall be issued.

A separate citation shall be issued for each unit of self-propelled mining equipment that is observed being operated in the working place without the required illumination. Such citation shall identify the section and working place in which the violation was observed, the type of self-propelled equipment that was being operated in the working place, and the area(s) of the working place from which measurements were taken to establish a violation. Suggested wording for a citation would be:

An area of the right rib, approximately 14 feet outby the face, was not lighted to 0.06 footlamberts while the loading machine was being operated in the No. 3 working place of 2 left off north main section. Light measurements were taken with a Go/No Go light meter in accordance with the provisions of 30 CFR 75.1719-3.

3. Inspector's notes:

The inspectors notes should contain the following information for each citation issued for a violation of 30 CFR 75.1719-1(d):

a. the working place(s) in which equipment was being operated without the required illumination;

b. the type of equipment that was being operated in such working place(s);

c. the working place in which light measurements were taken if different from the working place in which the machine was being operated;

d. the area of such working place(s) from which light measurements were taken to establish a violation; and

e. other pertinent information including the distance from the floor to the roof for working places in which roof bolting machines were being operated, information concerning the illumination (if any) that was provided, etc.

An example of the type of information that should be included in the inspector's notes follows:

7/10/78 Lighting Survey
5 Northwest Section

No. 1 working place: Roof bolting machine, headlight only, seam thickness 52', light measurement made in No. 2 working place, No Go (red) reading on right rib approximately 8 feet outby face.

No. 2 working place: No equipment being operated.

No. 3 working place: Cutting machine, STE 5000428, left rear fluorescent light not burning, No Go (red) reading on left rib approximately 14 feet outby face.

No. 4 working place: Coal drill, STE No. 5000216, in compliance. (All readings green.)

No. 5 working place: Loading machine, headlight only, No Go (red) reading on right rib approximately 20 feet outby face.

Standard shuttle car, one headlight on each end, measurement taken in No. 2 working place, No Go (red) reading on face.

Off-standard shuttle car (same as above).

4. Compliance:

A violation of 30 CFR 75.1719-1(d) can be abated if the operator provides the required illumination for each working place in the working section while self-propelled min-

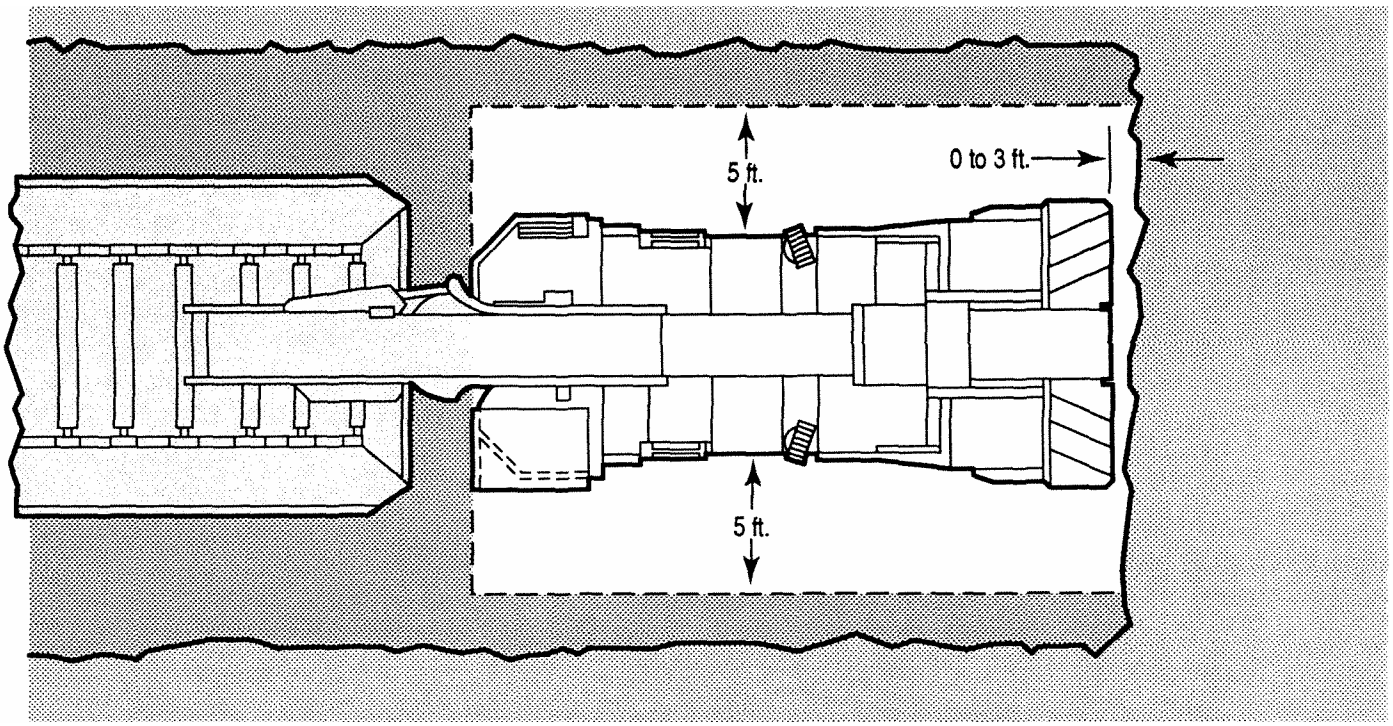

Figure 7.-Surfaces from which light measurements may be taken when the mining height is less than 42 inches.

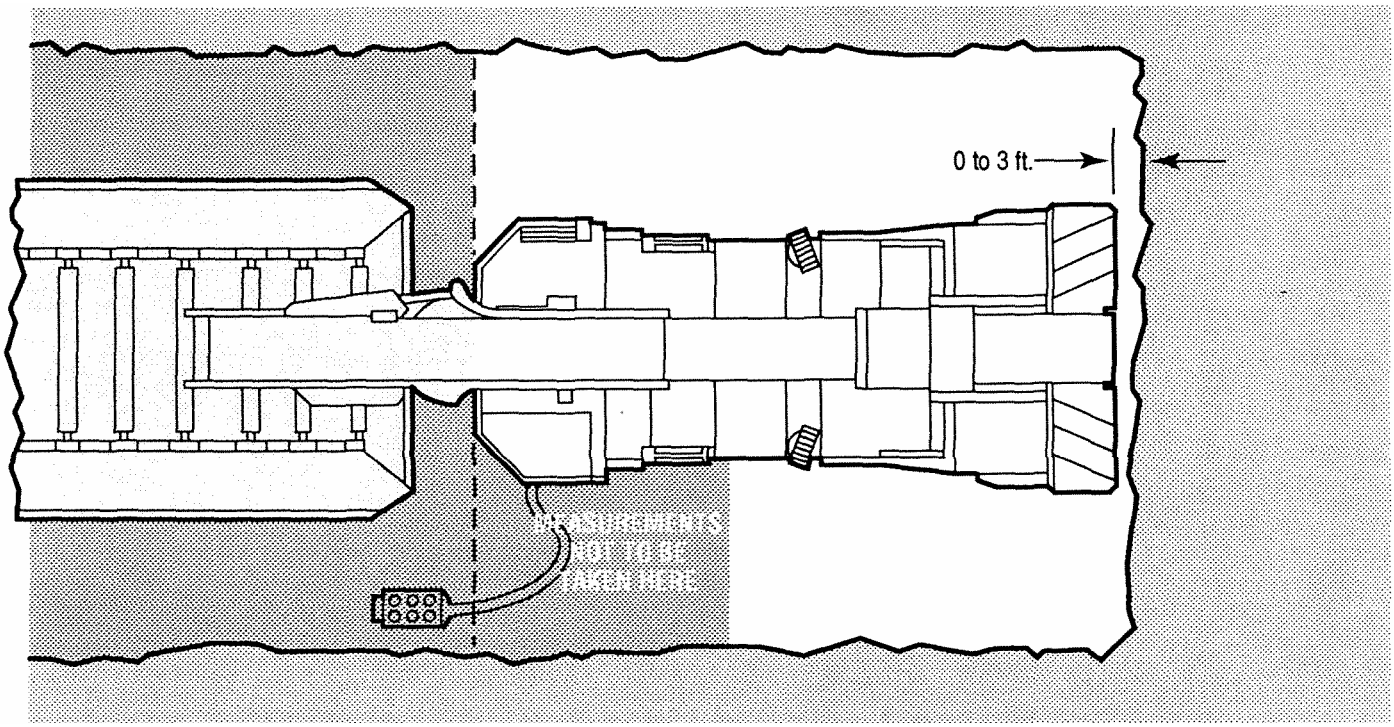

Figure 8.-Surface from which light measurements may be taken when remotely controlled continuous mining machines are operated in working places where the mining height is less than 42 inches. Measurements shall not be taken of the floor area between the cutter boom hinge pin or gathering head hinge pin and the coal face.

ing equipment is operated in such working places. In instances where an operator illuminates a working place with a lighting system that is installed and operated in accordance with an STE, the inspector shall consider the working place to be illuminated in compliance with 30 CFR 75.1719-1(d) without taking additional light measurements.

In instances where an operator illuminates a working place with a lighting system which has not been issued an STE, the inspector must take light measurements in accordance with 30 CFR 75.1719-3 to determine if, in fact, the system provides the required illumination.

5. Compliance-continuous mining machines, loading machines, coal drills, and cutting machines:

Section 75.1719-3 specifies the methods of measuring surface brightness to determine compliance with 30 CFR 75.1719-1(d). Enforcement personnel shall use the following procedures for determining compliance in working places in which continuous mining machines, loading machines, coal drills, and cutting machines are being operated.

a. Have the machine placed in the approximate center of the working place with the cutting head, loading head, drill bit, or cutter bar in contact with the coal face.

the darkest area required to be illuminated.

c. If an STE has been issued for the lighting system take a reading of the darkest area of the floor, roof, rib or face adjacent to the light fixture that is not lighted, that is covered with coal dust or other material or that is improperly oriented or maintained. If the dimensions of the working place exceed those specified in the STE, a measurement of the darkest area of the roof, floor or rib shall be make. Make certain that all measurements are taken with the area required to be lighted for the particular machine.

d. Headlights on continuous mining machines and loading machines should be oriented so that the maximum amount of light is provided on the coal face. This improves the contrast ratio and improves the ability of the machine operator to see the location of the cutting bits or gathering arms. Therefore, to allow the most efficient utilization of the available light,

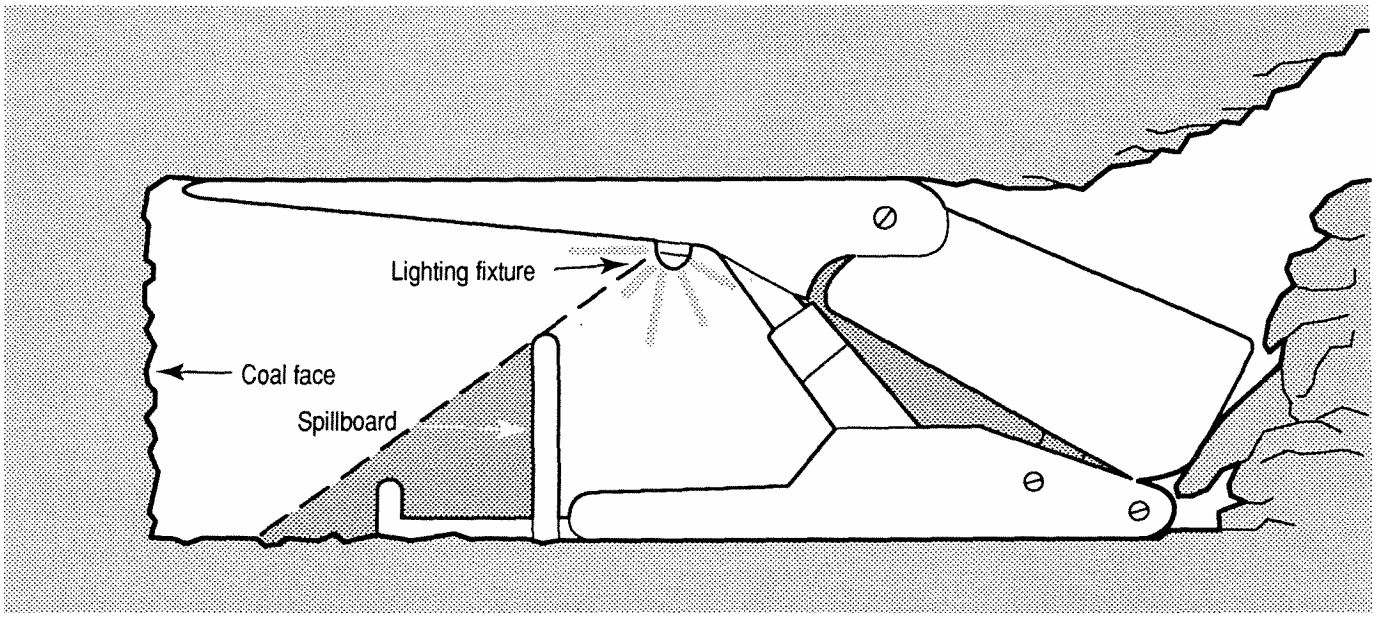

Figure 9.-Typical longwall lighting systems installation.

b. If an STE has not been issued for the lighting system, visually examine the roof, ribs, floor and facet that are within the area that is required to be illuminated and take a light measurement of

light measurements shall not be taken of the floor area between the cutter boom hinge pin or gathering head hinge pin and the coal face.

e. When the mining height is less than 42 inches, light measurements shall be made within an area the perimeter of which is 5 feet from any part of continuous mining machines, loading machines, coal drills, and cutting machines when measured parallel to the mine floor (Figure 7).

f. When the mining height is less than 42 inches and remotely controlled continuous mining machines are operated in the working place, light measurements shall not be make of the area on the right side of the machine and outby the center of the main frame (Figure 8).

6. Compliance-Longwall/shortwall mining systems:

Enforcement personnel shall use the following procedures for determining compliance in working places in which longwall and shortwall mining systems are being operated:

a. If an STE has not been issued for the lighting system, visually examine the areas required tobe lighted, as outlined in 30 CFR 75.1719-1(e)(4). Take light measurements of the darkest areas.

b. If an STE has been issued for the lighting system, take measurements of areas that are required to be lighted adjacent to the light fixture(s) that is not lighted, or that is covered with coal dust or other material, or that is not properly oriented or maintained as specified in the STE.

c. Problems have been encountered in illuminating the coal face and face conveyor to 0.06 footlamberts in longwall mining installations operating in coal seams under 42 inches in thickness. The problems have been caused by the lack of sufficient clearance between the bottom of the roof support chocks and the side of the face conveyor, leaving little or not space through which light fixtures installed on the chocks can cast light on the face conveyor or the coal face. There-

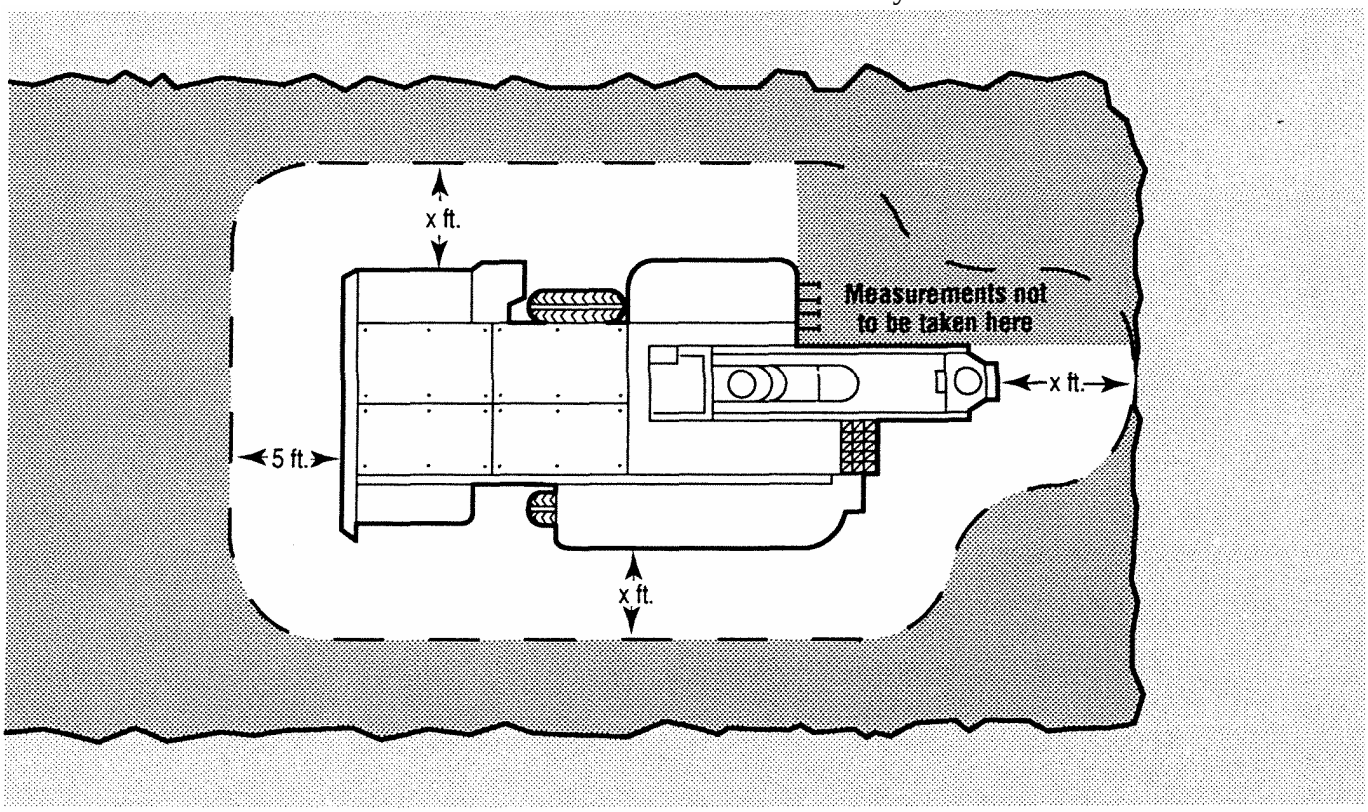

Figure 10.—Illumination requirements for roof bolting machines.

fore, in determining compliance with the illumination requirements for longwall mining installations operating in coal seams less than 42 inches in thickness, measurements shall not be taken on the face conveyor or the coal face. Measurements shall be taken the entire length of the travelway and the area within a distance of 5 feet horizontally from the control station, headpiece and tailpiece.

d. High spillboards are installed on many longwall face conveyors so that the coal will be retained on the face conveyor to prevent spillage. These spillboards are necessary to prevent spilled coal and coal dust from accumulating along the travelway and between the roof support shields or chocks. In some instances, the roof support shields or shocks barely clear the spillboards. If light fixtures are installed as shown in Figure 9, which is a practical location for the fixtures if the travelway is to be properly illuminated, the face conveyor and some of the coal face are in the shadow cast by the spillboard.

The spillboards on longwall face conveyors are considered "other obstructions necessary to insure safe mining conditions," as provided in 30 CFR 75.1719-3(b)(8). Consequently, in determining compliance with the illumination regulations for longwall mining installations, light measurements shall not be made of areas where shadows are cast by spillboards installed on the longwall face conveyors.

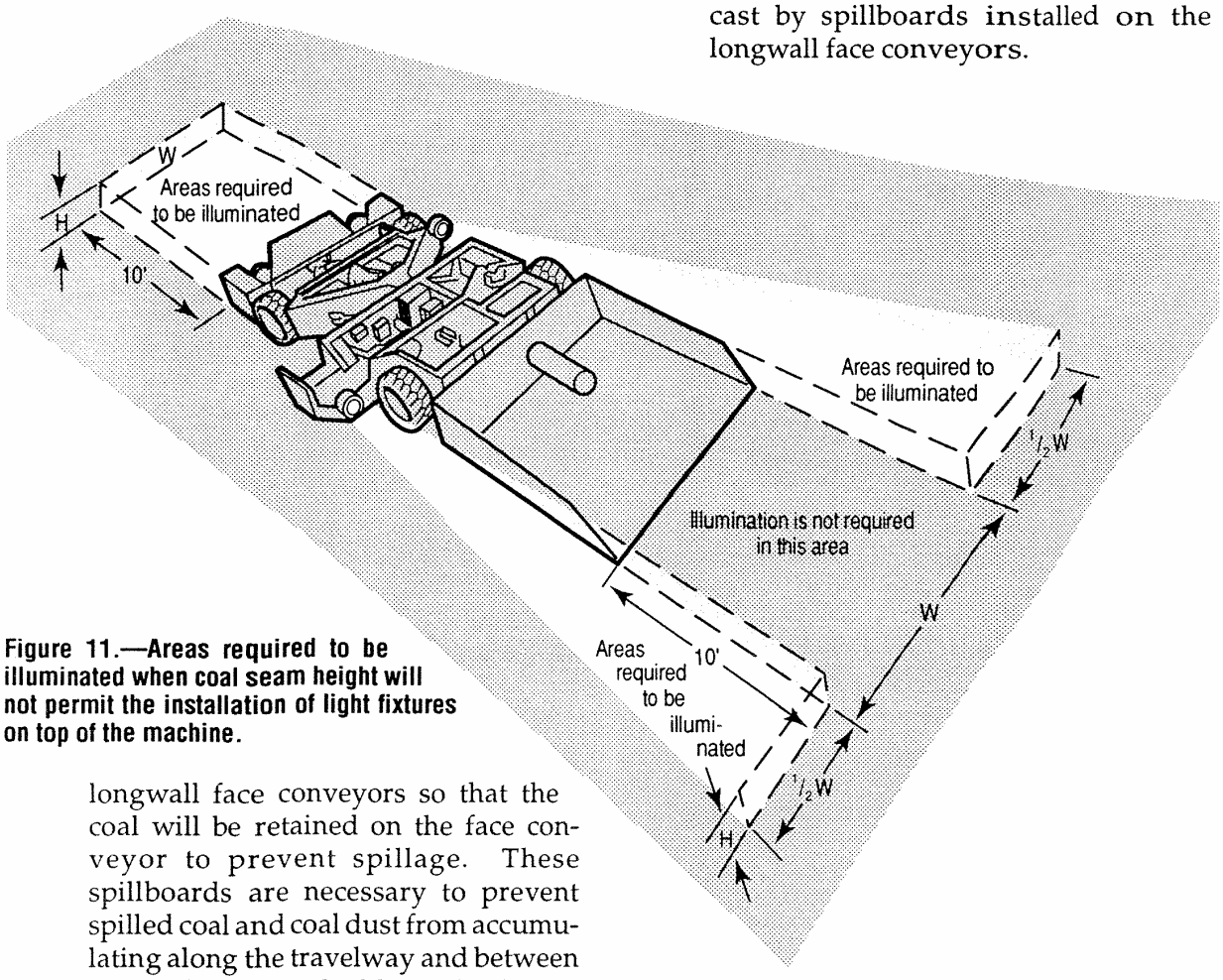

Figure 11.—Areas required to be illuminated when coal seam height will not permit the installation of light fixtures on top of the machine.

7. Compliance—Roof bolting machines:

Enforcement personnel shall use the following procedures for determining compliance in working places in which roof bolting machines are being operated.

a. Place the machine in the approximate center of the working place with the drilling head approximately 5 feet, or the distance between the floor and roof, whichever is greater, from the face.

b. If an STE has not been issued for the lighting system, visually examine all surfaces that fall with the specified distance (5 feet or the distance between the floor and roof, whichever is greater) from the machine and take a light measurement of the darkest area. Place the machine the specified distance from each rib and take a light reading of the darkest area of each rib. It may also be necessary to take a reading of the darkest area of the roof or floor within the area required to be lighted.

c. It an STE has been issued for the lighting system, follow the steps outlined in Item 2, but take a measurement only of the area adjacent to the light fixture that is not lighted, that is covered with coal dust or other material, or that is not properly oriented or maintained.

d. Light fixtures installed adjacent to supply trays on dual-head roof bolting machines create objectionable glare to the operator and helper. Therefore, to allow removal or repositioning of these light fixtures, the lighting system shall be considered in compliance if the required level of light is provided as determined by illimination measurements made with the drill heads either together or separated approximately 8 feel and in position to drill holes or install roof bolts.

e. When the mining height is less than 42 inches, measurements shall not be taken of the area in front of and to the side of the roof bolting machine operator(s) position(s). (See Figure 10.) This does not apply to roof drills that are an integral part of a continuous mining machine.

8. Compliance-Shuttle cars, tractors, scoops, etc.:

Enforcement personnel shall use the following procedures for determining compliance in working places in which shuttle cars, tractors, maintenance vehicles, scoops, load/haul/dump vehicles, etc., are being operated:

a. Determine the height and width of the vehicle at the widest and highest points (including canopies).

b. Have the vehicle placed with each end perpendicular to and 9.5 feet from a relatively smooth coal surface.

c. Take a light measurement of the darkest part of the area that is required to be illuminated

d. When the mining height will not permit installation of light fixtures at a location that will light the area directly in front of the machine, the areas outlined in Figure 11 may be lighted and measurements taken accordingly.

H. How to Take Light Readings with a Photometer

Inspectors shall use a Go/No Go photometer (light meter) that displays a green light when the brightness of a surface equals or exceeds 0.06 footlamberts and a red light when the surface brightness is less than 0.06 footlamberts. This instrument has a 26-degree acceptance angle. Measurements shall be taken with the Go/No Go light meter held perpendicular to and at a distance of 5 feet from the surface being measured. This procedure allows the light-sensing element in the meter to receive reflected light from a round field of approximately 4 square feet.

There are instances in which it will not be possible to hold the light meter perpendicular

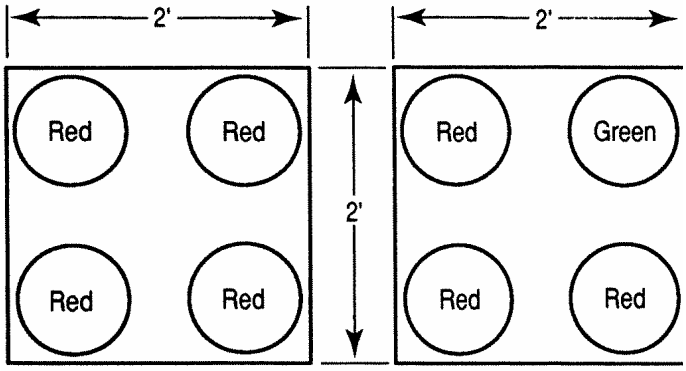

Figure 12.-Determination of surface brightness by averaging method.

To the surface at a distance of 5 feet because of reduced seam height, narrow entries, and restricted clearance over machines. In such cases, four surfaces brightness measurements must be taken at the corners of a square field having an area of 4 square feet with the light meter held not more than 24 inches from the surface being measured. If the light meter displays a green light for one or more of the four measurements in the group, the 4-square-foot area shall be considered to be in compliance (Figure 12).

Measurements may be taken of any surface where roof control posts or other obstructions are not in a direct line between one or more light fixture(s) and the surface being measured. To ensure an accurate measurement, the inspector should hold the light meter so that his/her body does not shadow the area being measured, and ensure that cap lamps are not directed at the area being measured.

Chapter

4 Trailing cables

A. Short Circuit Protection: Underground Trailing Cables

Each trailing cable shall be protected by either a fuse or a circuit breaker that can detect and interrupt the current resulting from a short circuit at any point between the short circuit protective device and the machine to which the cable is supplying power. Section 75.900 prohibits the use of fuses for the short circuit protection of three-phase AC trailing cables. Only fuses that have been tested and approved by Technical Support under Part 28 are acceptable for the short circuit protections of DC and single phase AC trailing cables. Approved fuses are identified by a MESA or MSHA approval number. (See 30 CFR 75.601-2and 3.)

Adequate current interrupting capacity means that the fuse or circuit breaker is cable of safely interrupting the current at any point in the protected circuit.

In order to insure adequate current-interrupting capacity, the voltage rating of a circuit breaker or fuse must not be less than the maximum voltage of the circuit in which it is installed. In instances where a molded case circuit breaker is used to provide short circuit protection for a DC trailing cable, it may be necessary to connect two or more poles of the circuit breaker in series in order to achieve the required voltage rating. When two or more poles of a molded case circuit breaker are connected in series, the poles of the circuit breaker Should be wired so the bottom of one pole is connected to the top of the next pole, to decrease the voltage stresses between adjacent poles when the circuit breaker opens under load. It is not acceptable to connect sues in series to achieve a higher voltage rating.

Before instantaneous settings higher than those specified in 30 CFR 75.601-1 are authorized or if unusual situations are encountered, a short circuit analysis shall be conducted to determine that the settings allowed are below the minimum available short circuit current.

B. Short Circuit Protection: Surface Trailing Cables

Prudent electrical engineering practices would require that three-phase trailing cables be protected by an individual circuit breaker which will interrupt each underground power conductor and be equipped with devices to provide short circuit and ground fault protection.

Section 77.600 can be cited only if no short circuit protection is provided or if a short circuit analysis of the system indicates that the setting of the short circuit protective device exceeds the amount of current that can flow if a short circuit occurs in the trailing cable at the cable entrance into the machine or equipment. Appendix H of this handbook contains a listing of the continuous ampere ratings and magnetic trip ranges and adjustment positions for common molded case circuit breakers.

C. Mechanical Protection

Citations issued should include a description of any damage to the trailing cable that has been caused by mobile equipment or any practice that is causing damage, such as improper anchorage.

D. High-Voltage Splice Inspection Procedures

The following procedures shall be followed by inspectors in determining whether a splice in a high-voltage cable is made in accordance with the manufacturer's specifications and whether the shielding is being replaced:

1. All inspectors shall make visual inspections of high voltage splices and shall question mine electricians to determine that they know the manufacturer's specifications and that the shielding is being replaced.

2. Electrical inspectors shall check a representative number of such splices with an AC voltage detector (TIC tracer), using the following precautions:

   a. high-voltage gloves shall be worn at all times while using the instrument;

   b. the sensing element shall only be held close to the splice and under no circumstances allowed to contact the splice.

E. Splice Evaluation Criteria: Surface Trailing Cables

Splices with taped outer jackets can usually be considered to be temporary splices. Regardless of whether a splice is temporary or permanent, all splices in trailing cables must be made in such manner that a hazard to the miners is not created. The following is intended as a general guide for evaluation of trailing cable splices and failure to comply with any of these requirements should be cited under the indicated section.

1. Each power conductor shall be joined by mechanical connections (30 CFR 77.504).

2. Each power conductor shall be reinsulated to the same degree of insulation as the power conductors in the cable (30 CFR 77.601).

3. Semi-conducting tape, where provided, shall be replaced over each power conductor and shall be continuous across the splice (30 CFR 77.804(b)).

4. Metallic shielding, where provided, shall be replaced around each power conductor and shall be continuous across the splice (30 CFR 77.804(b)).

5. All grounding conductors shall be individually spliced (30 CFR 77.804(b)).

6. The ground check conductor shall be spliced and reinsulated to the same degree of insulation as the ground check conductor in the cable (30 CFR 77.601).

7. An outer jacket comparable to the original shall be placed over the completed splice (30 CFR 77.601 for temporary splice; 30 CFR 77.602(c)for permanent splice).

8. Splices made in low-voltage trailing cables shall provide continuity of all components (30 CFR 77.906).

F. Permanent Splices: Underground Trailing Cables Inspection Procedures

An acceptance number will generally be provided on the outer sleeve or jacket of permanent splices. A&CC tests permanent splices for the sole purpose of determining the flame-resistant qualities. The inspector must determine whether the splice is effectively insulated and sealed so as to exclude moisture. Particular attention should be given to splices that are made with lapped tape to insure compliance.

Particular attention shall be given to the manner in which permanent splices are made in trailing cables. Manufacturers' specifications on all permanent splice kits emphasize the importance of proper cable preparation, which includes cleaning the cable to insure that the splice sleeves bond to the conductors and cable jackets. Inspectors shall take advantage of every opportunity to observe cable splicing underground to insure that the completed splice will not constitute a fire or shock hazard to miners.

If cables are not well cleaned, the splice's outer jacket will have a tendency to slip on the cable and fray at the ends. These frayed ends will catch on protruding objects such as ribs, chunks of coal, and cable reel guides and cause further damage to the cable. Permanent splices that are damaged to the extent that water is not excluded or splices that have an outer jacket that is not bonded in its entirety to the original cable constitute noncompliance with this section.

Chapter

5 Grounding

A. Metallic Frames and Enclosures: Surface Equipment

An inspector shall not approve any method of grounding that does not include a solid connection to a grounding conductor which extends to the grounded point of the power source. The grounded power conductor of a solidly grounded alternating-current power system may serve as the equipment grounding conductor only between the grounded point of the power source and the grounded enclosure of the service disconnecting means for a building or other stationary facility. The grounded point of the power source and the metallic enclosure of each service disconnecting means shall be connected to an acceptable grounding medium such as metal waterlines having low resistance to earth, a low-resistance ground field, etc.

The connecting of different metallic enclosures of electric equipment receiving power from the same ungrounded alternating current system to different, unconnected grounding mediums does not ensure that there is no difference in potential between such enclosures and earth, and has resulted in several electrocutions. Therefore, this method of grounding is not acceptable.

B. Metal Battery Connector Housings During Charging

Metal battery trays shall be effectively grounded to the battery charger frame during charging. Technical Support's Mine Electrical Systems Division conducted tests on two-pole battery connectors to evaluate the effectiveness of the electrical connection between the connector housings as the means of grounding the battery trays. These tests indicate that the tolerance fit between the male and female connector housings does not provide an effective electrical connection, particularly when the connectors are contaminated with water, rock dust, or mud. In view of these test results, enforcement personnel shall not accept the use of the tolerance fit between male and female connection housings to ground battery trays to the battery charger frame during charging. Section 75.703 also requires that metal battery connector housings be effectively grounded to the battery charger frame during charging. Consequently, provisions must also be made to effectively ground metal battery connector housings during charging. The grounding requirements for two-pole battery connectors and battery trays are summarized in Figure 13.

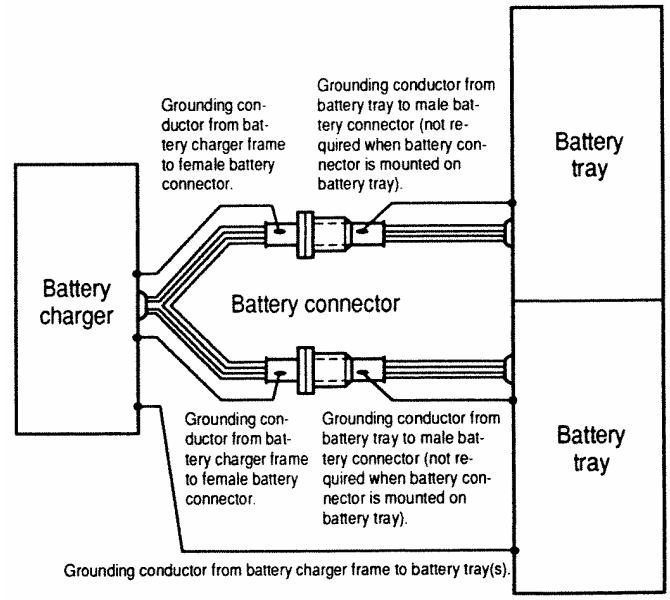

Figure 13.-Battery connector battery tray grounding requirements when two-pole battery connectors are used.

C. Purpose of Grounding Resistor

The purpose of the grounding resistor is to limit the ground fault current to a predetermined value during fault conditions. The current value is selected to limit the voltage that will appear on the frames of equipment during a phase-to-ground fault while providing sufficient ground fault current for reliable relaying. Grounding resistors used in mine power systems usually have a current rating of 15, 25, or 50 amperes, depending on the particular system for which the resistor is designed. The resistance (R) of a grounding resistor can be calculated from the phase-to-neutral voltage of the system (V) and the current rating of the resistor (IR), using Ohm's Law.

Example: V = 2,400 volts

I_R = 25 amperes

$$R = \frac{V}{I_R}$$

$$R = \frac{2{,}400 volts}{25 amperes}$$

R = 96 ohms

This section limits the voltage drop in the high-voltage grounding circuit external to the grounding resistor to not more than 100 volts because a person's body is essentially in parallel with the grounding circuit when he/she stands on the earth and touches the frame of a unit of equipment that is connected to the grounding circuit. During a phase-to-ground fault, most of the voltage drop appearing across the grounding circuit will also appear across the person's body. Consequently, if a 25-ampere grounding resistor is used, the maximum impedance of the grounding circuit cannot exceed 4 ohms. (See Figure 14.)

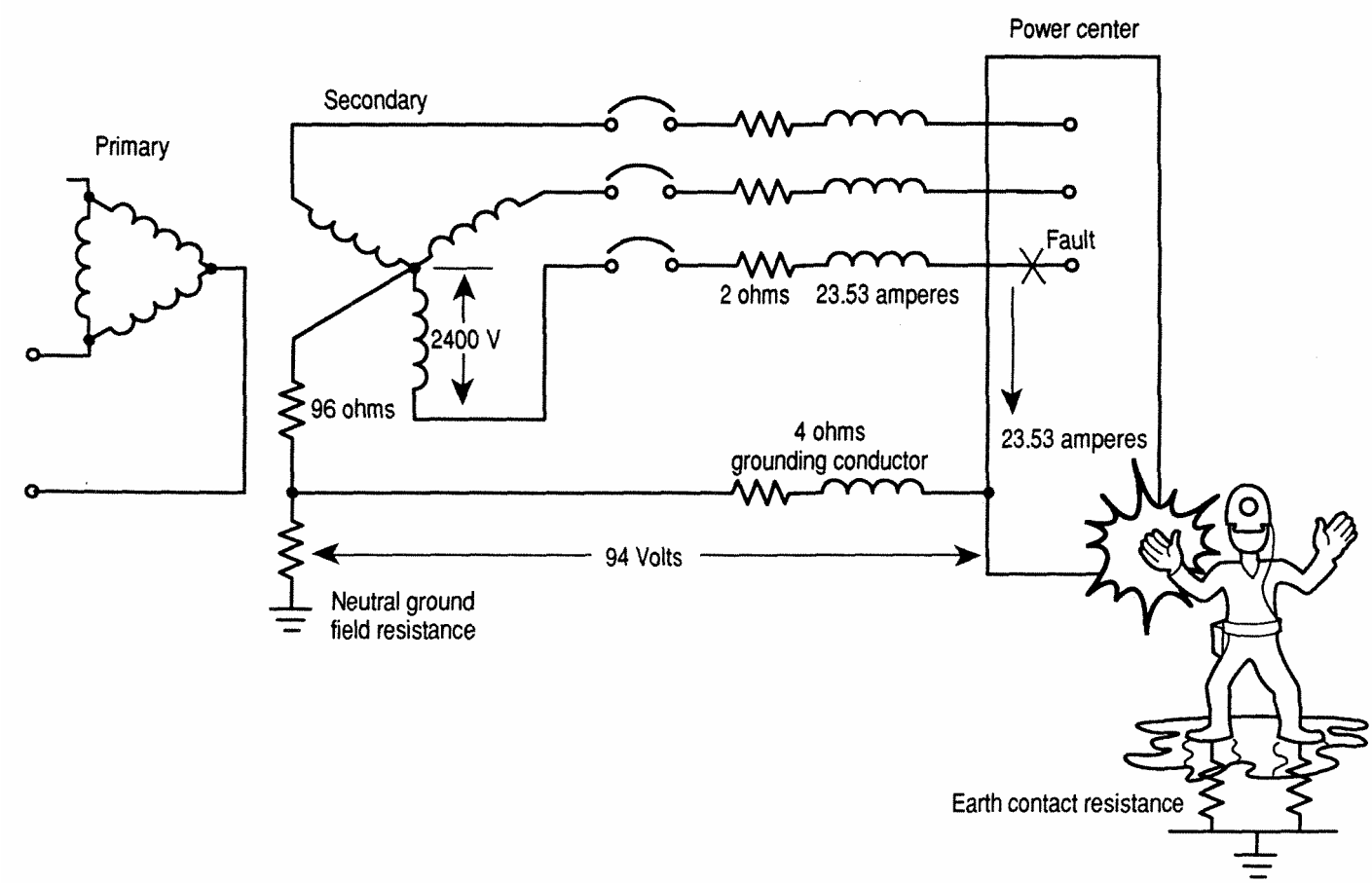

Figure 14.-Touch potential of resistance grounded system under fault conditions.

When the rating of a grounding resistor is unclear, copy the nameplate data and consult with the manufacturer to verify that the resistor is rated for the maximum fault current continuously.

Electrical inspection personnel should carefully examine highvoltage grounding resistors for improper connection into the circuit, improper rating, broken connections to the resistor, and broken jumpers between resistor coils. When heat is observed rising from a grounding resistor, the following conditions exist:

1. a grounded-phase condition, probably in the cable; and

2. an inoperative grounded-phase relay or trip circuit in the circuit breaker.

D. Resistance Grounded Circuits and Equipment

System neutrals are normally obtained by using source transformers or generators with wye-connected secondary windings. The neutral is then readily available for grounding purposes. For delta-connected systems grounding transformers are used to derive a neutral that is then grounded through a suitable resistor.

Figures 15 and 16 show in simplified form the proper method of connecting resistance grounded circuits extending underground.

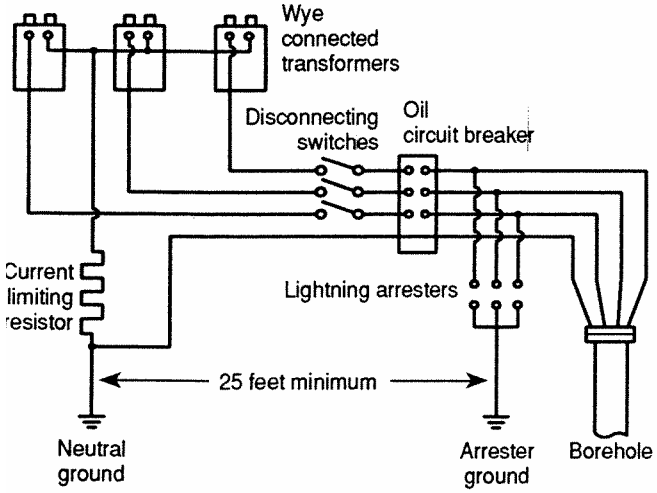

Figure 15.-Wye-connected power system with current-limiting resistor.

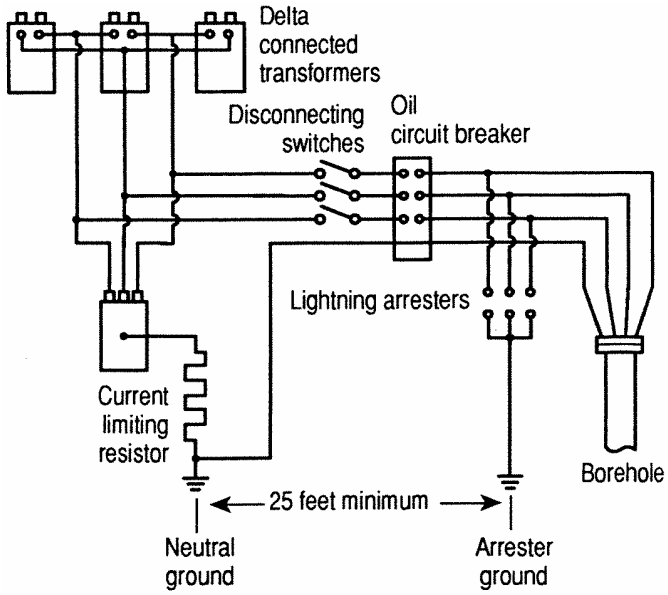

Figure 16.-Delta-connected power system with grounding transformer and current-limiting resistor.

The type of grounding transformer most commonly used us a threephase zigzag transformer. The impedance of the transformer to three-phase currents is high, so that when there is no fault on the system, only a small magnetizing current flows in the transformer windings. The transformer impedance to ground-fault current, however, is low. The transformer divides the ground current into three equal components; these currents are in phase with each other and flow in the three windings of the grounding transformer. The method of winding is such that when these three equal currents flow, the current in one section of the winding of each leg of the core is in a direction opposite to that in the other section of the winding of that leg. The only magnetic flux that results from the zero-sequence fault currents is the leakage flux about each winding section. This accounts for the low impedance of the transformer to ground-fault current. (See Figure 17.) The connections and current distributions in a wye-delta grounding transformer bank are shown in Figure 18.

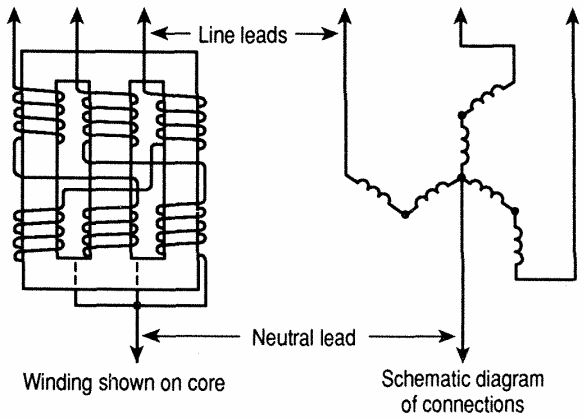

Figure 17.—Zigzag three-phase grounding transformer.

Example of how to calculate the proper size grounding transformer:

Transformer size = V x I

where V = phase-to-neutral voltage = 2,400 V

and I = rated ground fault current = 25 Amp.

Minimum size grounding transformer = 60 KVA

Transformer banks connected wye on the primary side and supplied power from a resistance-grounded circuit shall not have the primary neutral grounded. Such a configuration as shown in Figure 19 would provide the circuit with two neutrals (one resistance grounded and one solidly grounded) and would effectively short circuit the grounding resistor. Such a configuration is a violation of this section.

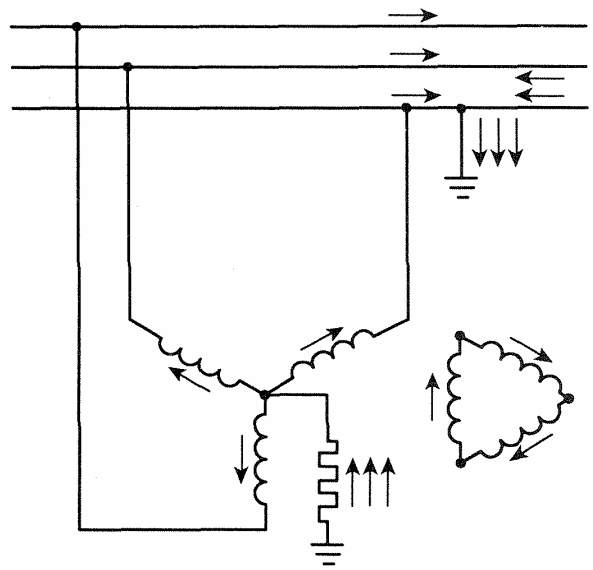

Figure 18.—Connections and current distribution in a wye-delta grounding transformer.

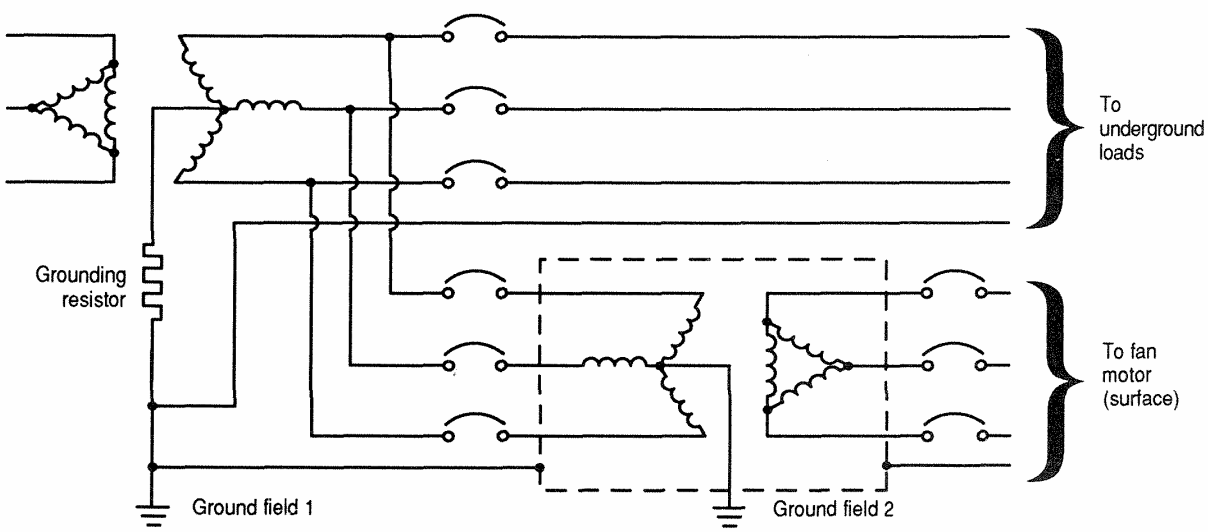

Figure 19.—An unacceptable ground fault configuration. This system will not comply since fault current will flow through the second neutral (connected to ground field 2), effectively shorting out the grounding resistor during fault conditions.

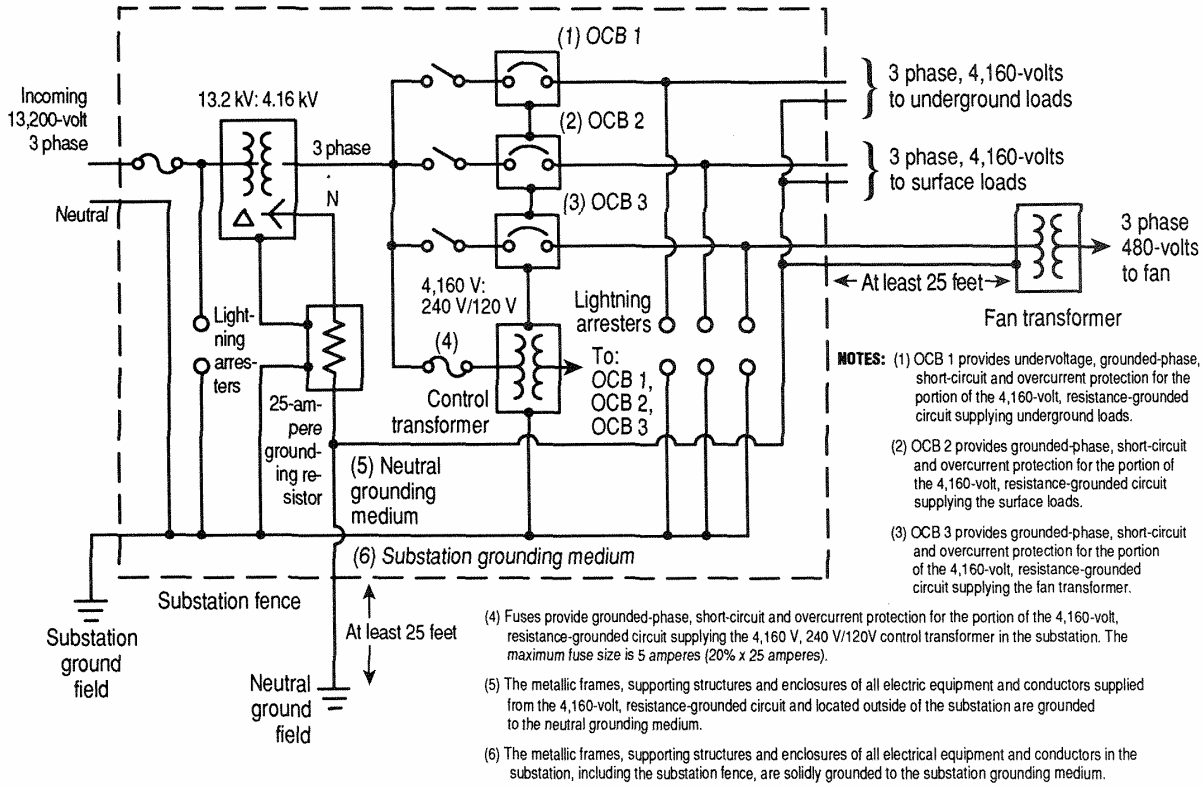

Figure 20.—One-line diagram showing grounding and grounded-phase protection requirements for a high-voltage resistance grounded circuit supplying both surface and underground loads.

E. Grounded-Phase Protection for All Circuits of a Resistance-Grounded System

Inspectors should verify that all three-phase circuits of a resistance grounded system are protected against the harmful effects of a grounded phase in any circuit connected to the same transformer secondary. (See Figure 20.)

Chapter

6 Ground check monitor test procedures

A. High-Voltage

Normally, testing of ground check circuits is necessary for determining compliance, except in instances where it is obvious that the ground check circuit is by-passed or otherwise obviously inoperative. Such testing can be time consuming and can cause unscheduled power interruptions; therefore, management should be consulted, and routine testing of ground check circuit s should take place during idle shifts or idle periods when practicable.

Because of the shock hazards involved in testing ground check circuits in underground mines, the following test **procedures** shall be followed:

1. During routine electrical inspections,the ground check circuit shall be tested by opening the ground check conductor at the extreme (load) end of each branch circuit.

2. When there is reason to believe that breaking the grounding conductor will not open the circuit breaker, a representative number of ground check circuits shall be tested using the following procedures:

   a. At least two MSHA electrical inspectors shall participate in the testing.

   b. Open the ground check conductor at the extreme (load) end of the circuit. If the circuit breaker opens, reconnect the ground check conductor and proceed.

   c. If the breaker does not open, disconnect and ground the high-voltage conductors.

   d. Open the grounding conductor immediately inby the origin of the ground check circuit.

   e. When frames of equipment are connected in series by the grounding conductor, open the grounding conductor between any two units of electric equipment whose frames are connected to the grounding conductor.

   f. Open the grounding conductor at the frame of the most distant load that the grounding conductor being monitored by the ground check circuit is intended to protect.

If steps d, e, and f actuated the ground check relay, the ground check circuit is in compliance with MSHA regulations. If the above steps did not actuate the ground check relay, part of the ground check current is probably flowing through a parallel path (earth) instead of through the grounding conductor in the high-voltage cable.

3. If opening the grounding conductor as outlined above did not actuate the ground check relay, perform the following steps:

a. Determine the current rating of the neutral grounding resistor of the system.

b. Determine the maximum allowable resistance in the grounding circuit that will not exceed a 100-volt drop in the grounding circuit:

Allowable resistance =

$$\frac{100\,volts}{current\,rating\,of\,grounding\,resistor}$$

15 amperes-6.67 ohms
25 amperes-4 ohms
50 amperes-2 ohms

c. Increase the resistance of the ground check conductor by an amount equal to the allowable impedance. Example: If a 25 ampere grounding resistor is used, insert 4 ohms resistance in series with the ground check conductor.

d. Short out the test resistor and energize the ground check circuit.

e. Remove the shorting wire from the resistor. If the ground check relay actuates, the ground check circuit is in compliance with MSHA regulations.

The amount of resistance specified in Step 3 does not take into account the impedance of the system grounding conductor. This impedance is usually small in a typical mine power system, and ignoring it will compensate for possible measurement inaccuracies such as meter tolerances and voltage variations.

B. Low- and Medium-Voltage

If opening the grounding conductor opens the circuit breaker, the performance requirements of the ground check circuit are satisfied. If the device does not trip the circuit breaker when the ground wire is broken, perform the following steps:

1. Determine the current rating of the neutral grounding resistor of the system.

2. Determine the maximum allowable resistance in the grounding circuit that will not exceed a 40-volt drop in the grounding circuit:

Allowable resistance =

$$\frac{40\,volts}{current\,rating\,of\,ground\,resistor}$$

5 amperes-8 ohms
10 amperes-4 ohms
15 amperes-2.7 ohms
25 amperes-1.6 ohms

To compensate for voltage variations, instrument error, and other measurement inaccuracies, the value of allowable resistance shall be multiplied by 125 percent to determine the actual amount of resistance to be inserted in the ground check conductor. Insert the resistor in series with the ground check conductor, place a shorting jumper across the resistor, and energize the ground check circuit. Remove the shorting jumper. If the circuit breaker opens when the jumper is removed, the performance requirements for the ground check circuit are satisfied.

When an arc suppression device is installed in a power center, the ground check circuit should be connected on the machine side of the device. Monitoring through an arc suppression device preloads the device and reduces its effectiveness in suppressing intermachine arcing and may also cause false tripping of the ground check circuit.

Chapter

7 High-voltage circuit breakers

A. Protective Devices

The following information is provided to assist inspection personnel in the evaluation of the protective devices of a suitable high-voltage circuit breaker.

B. Undervoltage Protection

The principal purpose for undervoltage protection is to prevent automatic restarting of equipment when power is restored after an outage.

C. Grounded-Phase Protection

There are four common methods of accomplishing grounded-phase protection:

1. **Direct Relaying.** In this method, grounded-phase current is detected directly with a current transformer installed in the grounded neutral conductor.

   See Figure 21. Note: the current transformer must not be installed in the equipment grounding conductor.

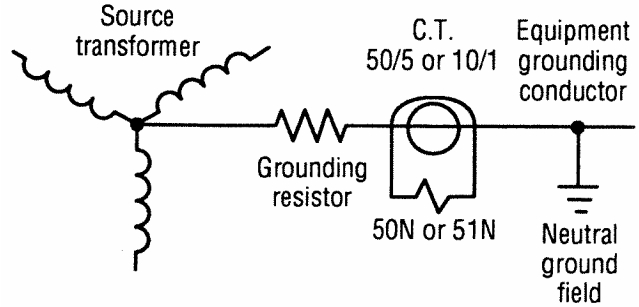

Figure 21.-Direct relaying to provide grounded-phase protection.

Example:
Current transformer ratio – 50/5 or 10/1
Grounded-phase relay pickup – 1.0 ampere
Grounded-phase protection – 10 x 1.0 = 10.0 amperes

2. **Balance Flux Relaying.** In this method, grounded-phase current is detected by a doughnut-type current transformer installed around the three phase conductors. (See Figure 22.) Note: the equipment grounding conductors (including conductor shields) must not be installed through the current transformer.

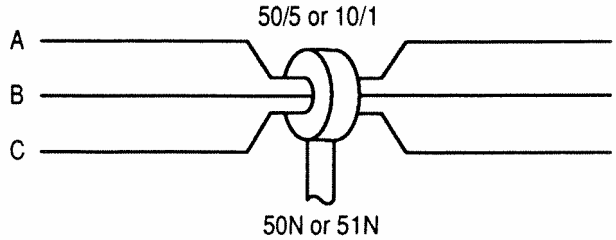

Figure 22.-Balanced flux relaying to provide grounded-phase protection.

Example:
Current transformer ratio – 50/5 or 10/1
Grounded-phase relay pickup – 0.5 ampere
Grounded-phase protection – 10 x 0.5 = 5.0 amperes

3. **Residual Trip Relaying.** In this method, grounded-phase current is detected as the unbalance in the currents produced by the phase current transformers. (See Figure 23.)

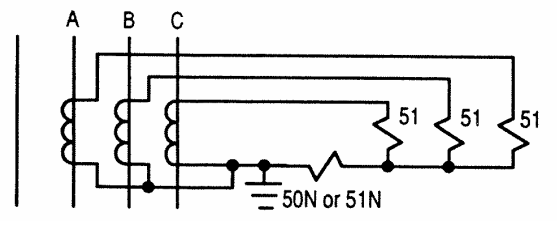

Figure 23.-Residual trip relaying to provide grounded-phase protection.

Example:
Current transformer ratio – 100/5 or 20/1
Ground-phase relay pickup – 0.5 ampere
Grounded-phase protection – 20 x 0.5= 10.0 amperes

4. **Potential Relaying.** In this method, grounded-phase current is detected as the voltage drop across the grounding resistor. (See Figure 24.) An advantage of this method over the three previous methods is that grounded-phase protection is still provided even if the grounding resistor is open. For this reason, potential relaying is often used to provide backup grounded-phase protection for resistance-grounded systems.

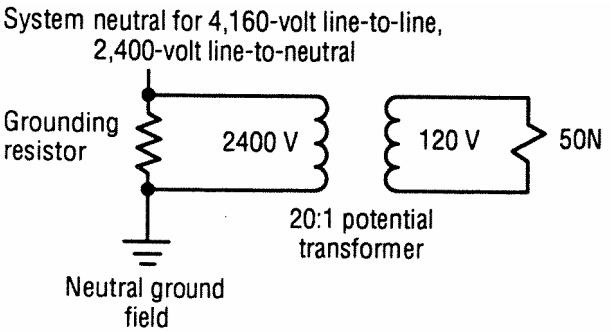

Figure 24.-Potential relaying to provide grounded-phase protection.

Example: For a 4,160 volt line-to-line, 2,400 volt line-to-neutral system.
Potential transformer ratio – 2400/120 or 20/1
Overvoltage relay coil rating – 120 volts
Overvoltage relay tap – 40 percent
Grounded-phase protection – 20 x 120 x 40% = 960 volts would be the voltage setting of this method.

D. Sizing Current Transformer to Relay Burden

Problems have arisen in the field with high-voltage circuit breakers failing to trip on ground faults due to a mismatch of the current transformers and the grounded-phase relays. In several instances the ratio of the current transformers was too high for the relays to operate. In other cases, the burden of the grounded-phase relay coil was too great, causing the current transformer to saturate below the relay's pickup. Normally, current transformers are used to provide a common base current, usually 5 amperes, on the secondary for relaying ground faults and overcurrents. Current transformers obtain their rating by their ability to produce a fixed ratio of the primary current in the secondary without saturating when connected to a given burden. When a current transformer saturates, the secondary current and voltage level off and are not directly proportional to the current in the primary, thus leading to relaying inaccuracies. The voltage required to be produced in the current transformer to operate a given relay is the relay pickup current times the burden of the circuit. The burden is the impedance of the grounded-phase relay coil (or the grounded-phase relay coil in series with the overcurrent relay coil when the residual grounded-phase protection scheme is used), the current transformer secondary winding and the leads connecting the current transformer to the relay. A typical overcurrent relay burden range is 0.3 to 0.8 ohms, while a typical grounded-phase relay burden range is 18 to 22 ohms. The voltage required to be produced by the current transformer to operate a given relay is the relay pickup current times the burden of the circuit. It then follows that a typical grounded-phase relay would required higher current transformer voltage output than a typical overcurrent relay for reliable relaying.

Where an ungrounded high-voltage circuit is accepted for use underground under the provisions of 30 CFR 75.802(b), the circuit must be provided with grounded-phase protection. (See Figure 25.)

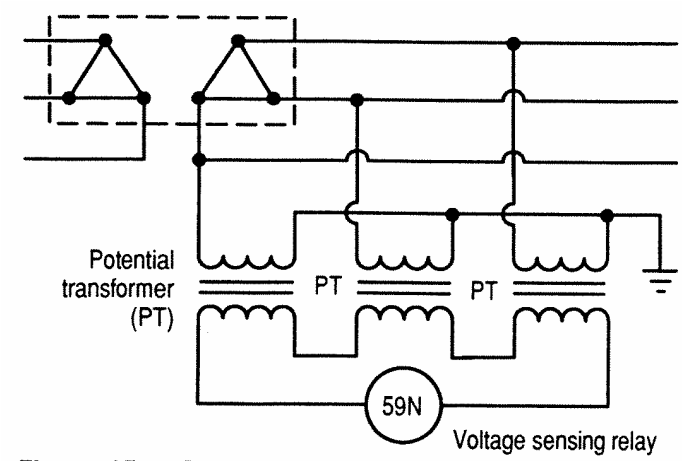

Figure 25.-Grounded-phase protection scheme for ungrounded systems.

E. How to Calculate Short Circuit Protection

Short circuit protection can be provided by using the instantaneous units of overcurrent relays or by suing inverse-time overcurrent relays with minimal time dial settings.

The pickup of the instantaneous unit of an overcurrent relay is independent of the pickup of the inverse-time unit and is determined by the position of the top of the screw on the instantaneous unit of most induction disc type relays.

Example:

Current transformer ration – 100/5 or 20/1
Instantaneous unit pickup – 20 amperes
Instantaneous setting – 20 x 20 = 400 amperes

F. How to Calculate Overcurrent Protection

Overcurrent protection is provided to protect conductors and conductor insulation from thermal damage due to excessive currents. The temperature rise of the conductor is proportional to the current squared, times the resistances of the conductor, times the amount of time the current is present. The higher the current, the faster the temperature rise of the conductor. Since the temperature rise is a function of time and current, an inverse time current relay is used for overcurrent protection. The two common relays used are the Westinghouse CO relay and the General Electric IAC relay. Schematic diagrams for these relays are shown in Figures 26 and 27. To determine whether the overcurrent relays on a circuit breaker are properly adjusted, the following information is required:

1. the ratio of the current transformers;

5. the pickup current of the overcurrent relays; and

6. the ampacity of the high-voltage cable.

The current transformer ratio is normally found on the current transformer nameplate or terminal block. Care should be taken to ensure that the locations of the tap screws do not short out

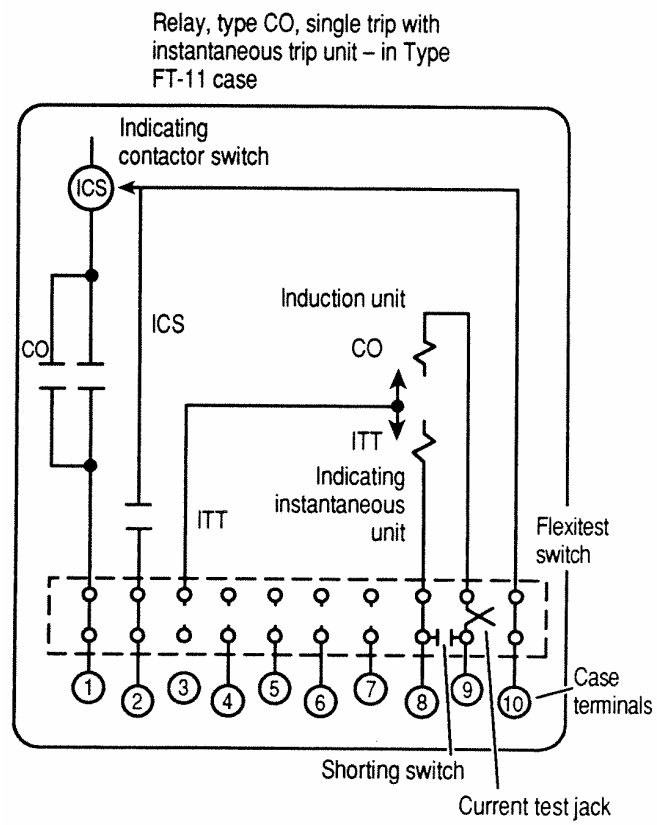

Figure 26.-Westinghouse type CO relay schematic.

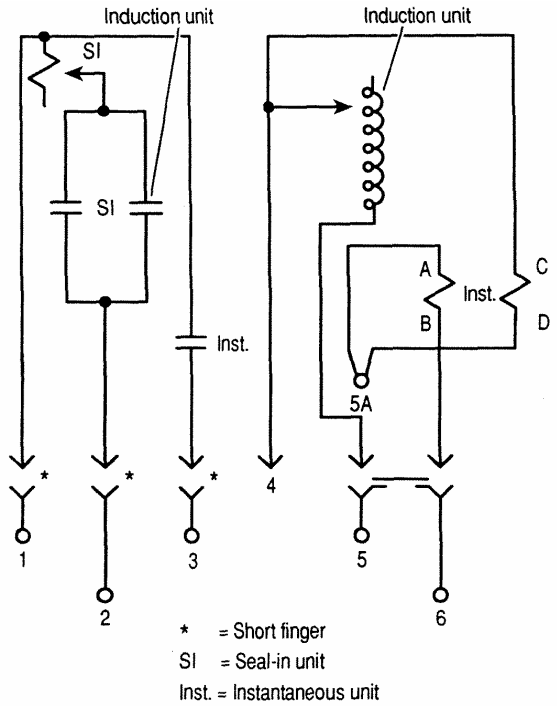

Figure 27.-GE type IAC51B internal connections, front view.

The secondaries of the current transformers. (See following examples.)

Examples:
Current Transformer Tap Block Information

Nominal Primary Rating - 600 amps
Nominal Secondary Rating - 5 amps

Nominal Rating and Turns Ratio Table

Taps	**600A**
BC	10/1
AB	20/1
AC	30/1
DE	40/1
CD	50/1
BD	60/1
AD	80/1
CE	90/1
BE	100/1
AE	120/1

The pickup of the overcurrent relay is determined by the tap setting, and the pickup is changed by moving the tap screw to the desired tap block current setting on the CO or IAC relays. (See Figures 28, 29, 30 and 31.)

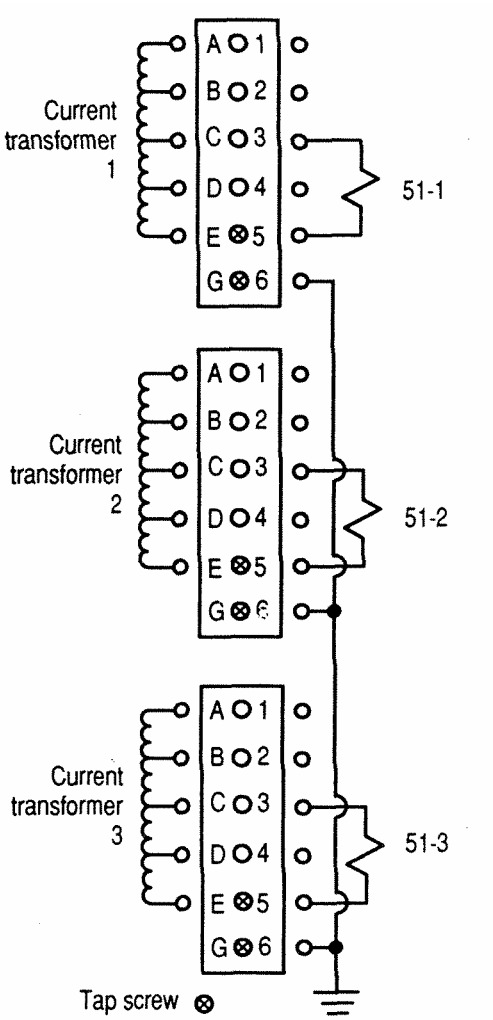

Figure 28.-Terminals C and E are connected to the relay coils. From the table, the ratio of primary to secondary current in the transformers is 90/1. Notice that the tap screws short E to G which effectively ground one side of the current transformer secondaries.

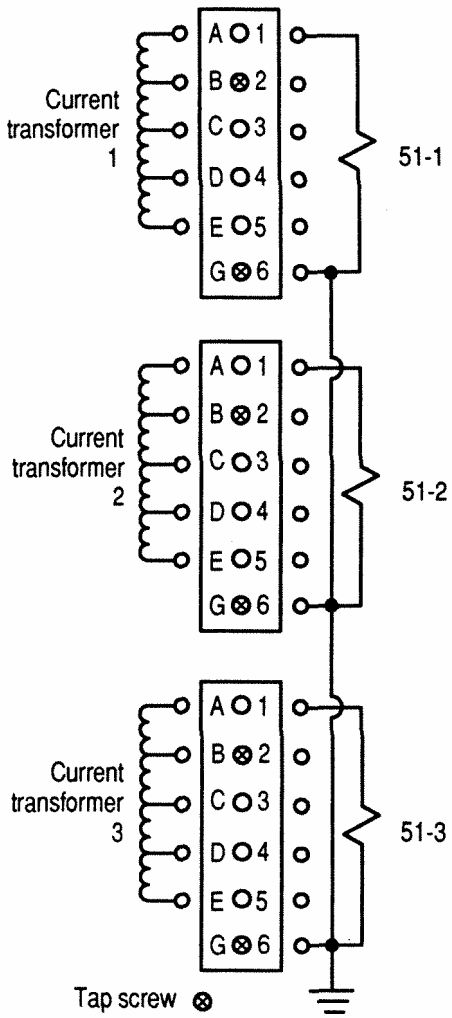

Figure 29.-The tap screws short B to G, so the relay is across terminals AB. From the table, the ratio of primary to secondary current in the transformer is 20/1. With this wiring method, any turns ratio can be obtained by changing only one wire and the tap screw.

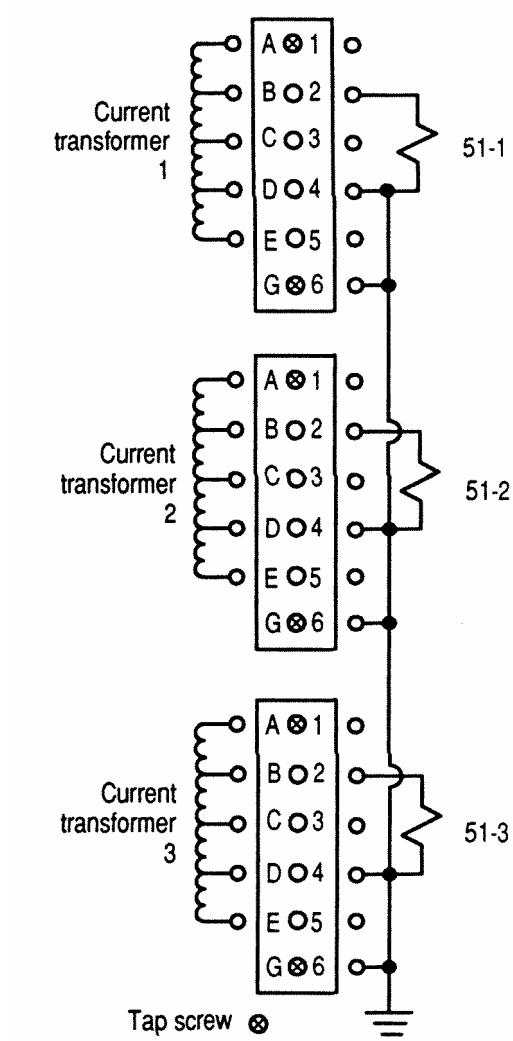

Figure 30.-Terminals D and G are connected together and to one side of the relay coils. Terminal B is connected to the other side of the relay coils. However, the tap screws short A to G and thus effectively short out the current transformer secondaries.

The ampacity of the cable is determined from the appropriate ampacity chart in Appendix A. Note: When using any of the ampacity charts, the ambient temperature in the mine must be considered.

Example:

Cable data – No. 2/0 AWG, 3-conductor, 5kV, copper mine power cable, 75 degrees Celsius insulation

Ambient temperature – 20 degrees Celsius

Ampacity – 260 amperes

The 1968 NEC, Article 240-5, Exception No. 2, states that adjustable-trip circuit breakers of the thermal trip, magnetic timedelay trip, or instantaneous-trip types shall be set to operate at not more than 125 percent of the allowable ampacity of the conductors. Therefore, the ratio of the current transformers and the tap setting of the overcurrent relays must be selected so that the circuit breaker trip current does not exceed 125 percent of the cable ampacity.

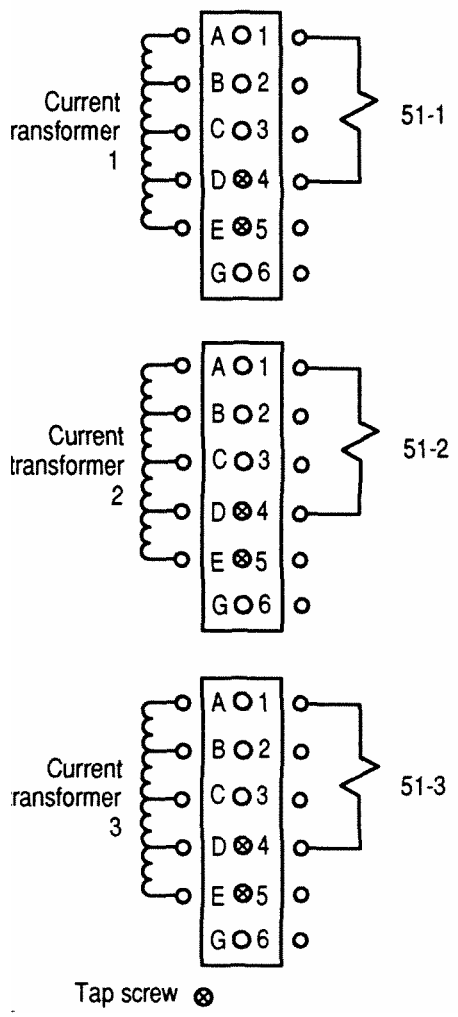

Figure 31.-Terminals A and D are connected to the relay coils. However, since D and E are shorted and they are both terminals of the current transformer secondaries, the current transformers are effectively shorted. Any two or more terminals of a current transformer that are shorted will short out the entire secondary. Also, the current transformer secondaries are not properly grounded.

Example:

Cable ampacity – 260 amperes

Maximum allowable trip current – 260 x 125% - 325 amperes

Current transformer ratio – 400/5 or 80/1

Relay tap setting (pickup) – 4 amperes

Trip current – 4 x 80 = 320 amperes

It can be readily seen that if the relay tap screw was set at 5, the circuit breaker would trip at 400 amperes, which would exceed the maximum allowable setting.

Overcurrent protection can also be provided by properly adjusted series trip circuit breakers or by circuit breakers equipped with solid state relaying.

All protective relay contacts must be properly connected into the circuit breaker control circuit for the circuit breaker to function properly. Figures 32 and 33 depict two typical circuit breaker control circuits.

G. Testing Methods

The tests required by 30 CFR 75.800-1 and 75.800-3 may be conducted in one of three ways:

1. **Primary injection test.** This test method involves passing sufficient current to cause the circuit breaker to trip through at least two current transformers associated with the circuit breaker. Since this method requires that test connections be made on high-voltage conductors or terminals, stringent safety procedures must be followed. This method simultaneously tests the current transformer ratio, the current transformer secondary wiring, the operation and calibration of the relays, and the operation of the circuit breaker tripping circuit.

2. **Secondary Injection test.** This test method involves passing sufficient current to cause the circuit breaker to trip through at least two of the protective relays associated with the circuit breaker. This method simultaneously tests the operation and calibration of the relays and the operation of the circuit breaker trip circuit.

3. **Mechanical activation test.** This test method involves mechanically activating at least two of the protective relays associated with the circuit breaker with a non-conductive probe. This method tests the operation of the circuit breaker trip circuit.

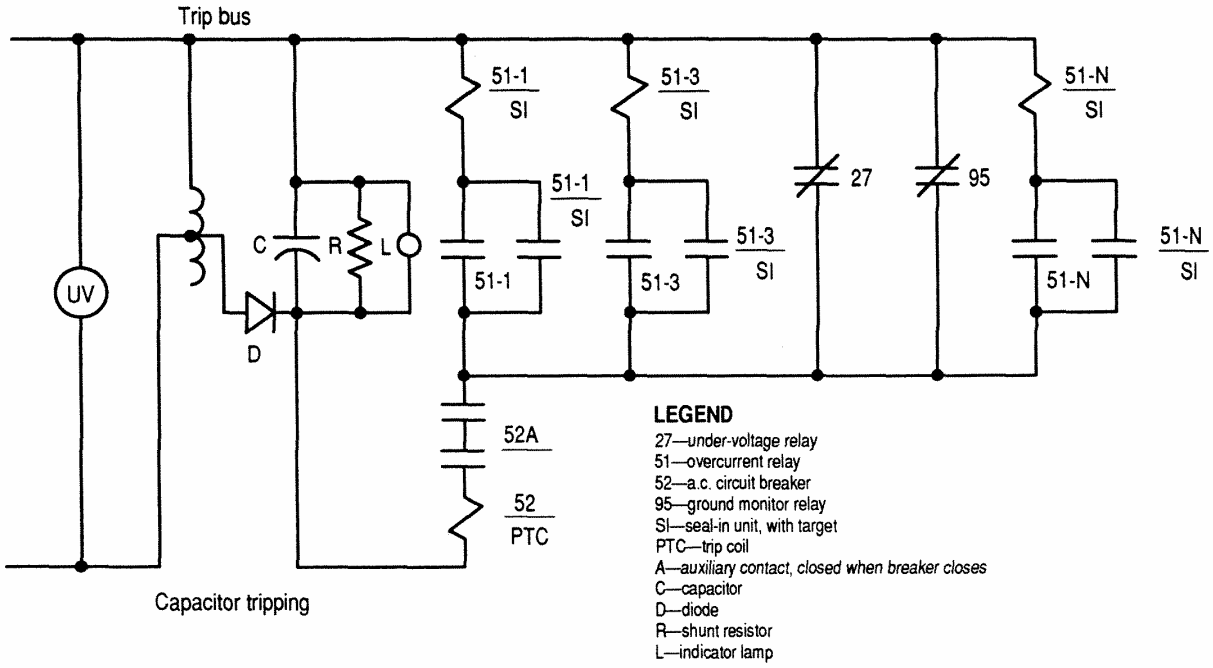

Figure 32.—Alternating-current control circuit.

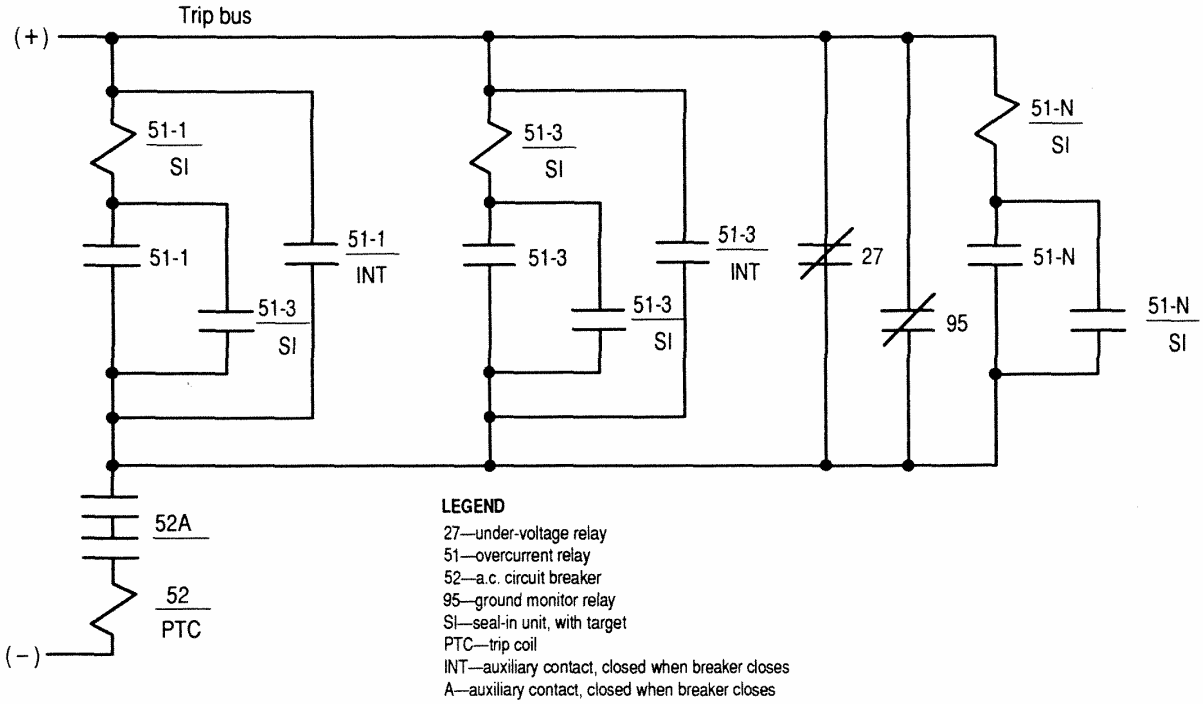

Figure 33.— Direct-current control circuit.

H. General Safeguards for Testing

The following precautionary safeguards shall be followed by MSHA electrical personnel during the testing of high-voltage equipment to determine compliance with 30 CFR 75.800 and 77.800.

1. Only electrical specialists who have received special training and who are experienced in testing high-voltage circuits and equipment shall be assigned to high-voltage substation testing. Such persons shall demonstrate their competence and knowledge to the district's electrical supervisor before performing high-voltage testing, unless under the direct supervision of the supervisor.

2. There shall be a minimum of two qualified electrical specialists present, and both shall actively participate in the testing at all times. No activities shall begin without the complete concurrence of both persons, who shall remain in full view of each other during the entire testing activity and who, as far as practicable, shall be responsible for each other's safety.

3. High-voltage gloves shall be worn by electrical inspection specialists while energizing, deenergizing, or grounding high-voltage circuits or equipment. Rubber boos in good condition, or shoes with overshoes that are rated at a minimum of 14,000 volts shall be worn by electrical inspectors at all times during testing operations.

4. Discuss the nature of the testing to be performed with mine officials and all other persons participating in the tests, and determine the voltage level and purpose of all incoming and outgoing circuits.

5. Make a visual observation of the substation before entering the substation gate. During this observation, those people involved in the testing shall familiarize themselves with the layout of the substation and the high-voltage circuits. Each person shall identify the high-voltage disconnects and determine how the substation can be property deenergized. The substation shall be observed for proper clearance of live unguarded high-voltage parts and lines; proper grounding of substation equipment, fences, and gates; heating of the grounding resistor; blown fuses; damaged lightning arresters; and other unusual or abnormal conditions.

I. Safeguards for Testing Totally Enclosed Substations

Totally enclosed substations are often used to provide power to small mines. These substations are completely enclosed in a metal box and contain transformers, resistors, circuit breakers, relays, and switches. Clearance and visibility inside these enclosed units are extremely limited; therefore, the following safeguards are needed to safely test this type of equipment:

1. All incoming high-voltage conductors shall be disconnected and grounded before any testing is performed by using the following procedure:

   a. All loads on the substation shall be removed by opening the appropriate circuit breaker(s) and load breaking device(s).

   b. The incoming high-voltage conductors shall be deenergized by opening a set of visible disconnects. High-voltage gloves shall be used to open gang-operated air break switches. The handles of such switches shall be locked out and tagged. High-voltage gloves and a hotstick shall be used to open high-voltage cutouts.

   c. The high-voltage conductors on the load side of the opened disconnects shall be

grounded to the station ground by using high-voltage gloves and a hotstick with grounding clamps. The grounding leads shall be connected to the station ground before they are connected to the high-voltage conductors.

2. Ground the frame of the test generator to the substation ground. Do not ground the test generator through the truck frame. Make sure that the truck frame is grounded to the generator.

3. Ground all outgoing high-voltage conductors unless such conductors are otherwise protected against accidental contact.

4. Be especially cautious when high-voltage capacitors can store a lethal charge. Capacitors are normally equipped with internal resistors that will bleed off the charge in approximately 5 minutes. After allowing at least 5 minutes for the charge to bleed off, using high-voltage gloves and a hotstick with grounding clamps, ground all circuits extending from high-voltage capacitors.

5. Ground the primary terminals of the control transformer.

6. The control voltage circuit shall be isolated completely from the control transformer secondary to prevent feedback into the system by removing the control circuit leads from the control transformer secondary terminals. The control circuit leads should be marked for proper reconnection after the testing is completed. The connections from the generator leads to the substation control circuit leads shall be insulated to prevent accidental contact with the control transformer secondary terminals. Persons shall not be present within the substation while any circuit is energized.

7. Conduct the necessary tests. Advise appropriate mine officials of any major adjustments needed to substation equipment.

8. Disconnect the generator leads from the substation control leads and reconnect the substation control leads to the control transformer.

9. Remove the grounding conductors from the primary bushings of the control transformer.

10. Remove the grounding conductors from the high-voltage capacitors.

11. Remove the grounding conductors from the outgoing highvoltage conductors and reconnect the outgoing highvoltage conductors.

12. Remove the grounding conductor from the station ground to the truck frame and generator frame.

13. Remove grounding leads from the incoming high-voltage conductors.

14. Using high-voltage gloves or high-voltage gloves and a hotstick, close the disconnects in the incoming highvoltage lines.

15. Reenergize the substation. Remember, when testing high-voltage equipment:

    a. Be sure you understand the circuits!

    b. Take your time – don't rush!

    c. Use your head!

    d. Take a second look!

    e. Watch out for your buddy!

    f. If it isn't grounded, it isn't dead!

These simple precautions may save your life.

J. Safeguards for Testing Open-Type Substations:

Whenever practicable, the entire substation shall be deenergized prior to any testing within an open-type high-voltage substation. In this case, the safeguards for testing totally enclosed substations shall be followed. When it is not practicable to deenergize an entire open-type substation for testing, the following safeguards shall be followed:

1. All high-voltage conductors associated with the circuit to be tested shall be disconnected and grounded before testing is performed. In addition, all other high-voltage conductors except those conductors that are guarded or are physically isolated by elevation of at least 8-1/2 feet above the work space in the substation shall be disconnected and grounded. The following procedures shall be used to disconnect and ground highvoltage conductors:

   a. All loads on high-voltage conductors shall be removed by opening the appropriate circuit breaker(s) and load breaking device(s).

   b. The incoming high-voltage conductors shall be deenergized by opening a set of visible disconnects. High-voltage gloves shall be used to open gang-operated air break switches. The handles of such switches shall be locked out and tagged. High-voltage gloves and a hotstick shall be used to open high-voltage cutouts.

   c. The high-voltage conductors on the load side of the opened disconnects shall be grounded to the station ground by using high-voltage gloves and a hotstick with grounding clamps. The grounding leads shall be connected to the station ground before they are connected to the high-voltage conductors.

2. Ground the frame of the test generator to the substation ground. Do not ground the generator through the truck frame. Make sure that the truck frame is grounded to the generator.

3. Using high-voltage gloves, visibly disconnect all outgoing high-voltage conductors associated with the circuit under test. Ground all outgoing high-voltage conductors associated with the circuit under test unless such conductors are otherwise protected against contact.

4. Be especially cautious when high-voltage capacitors are present. These capacitors can store a lethal charge. Capacitors are normally equipped with internal resistors that will bleed off the charge in approximately 5 minutes. Unless high-voltage capacitors and the associated circuits are physically isolated by an elevation of at least 8-1/2 feet above the work space in the substation, disconnect all capacitors, wait at least 5 minutes for the charge to bleed off, and then use high-voltage gloves and a hotstick to ground all circuits extending from the capacitors.

5. Unless both the control transformer and the control transformer primary circuits are physically isolated by a elevation of at least 8 ½ feet above the work space in the substation, open the primary disconnects for the control transformer and ground the primary terminals of the control transformer to the station ground.

6. Unless both the control transformer and the control transformer primary circuits are physically isolated by an elevation of at least 8-1/2 feet above the work space in the substation, the control voltage circuit shall be isolated completely from the control transformer secondary to prevent feedback into the system by removing the control circuit leads from the control transformer secondary terminals. The control circuit leads should be marked for proper reconnection after the testing is completed. The connections from the generator leads to the

substation control circuit leads shall be insulated to prevent accidental contact with the control transformer secondary terminals.

7. Conduct the necessary tests. Advise appropriate mine officials to any major adjustments necessary to substation equipment.

8. Disconnect the generator leads from the substation control leads and reconnect the substation control leads to the control transformer secondary terminals.

9. Remove the grounding conductors from the primary bushings of the control transformer and close the primary disconnects for the control transformer.

10. Remove the grounding conductors from the high-voltage capacitors and reconnect the high-voltage capacitors.

11. Remove the grounding conductors from the outgoing high-voltage conductors and reconnect the outgoing high-voltage conductors.

12. Remove the grounding conductor from the station ground to the generator frame.

13. Remove the remaining grounding leads from the high-voltage conductors.

14. Using high-voltage gloves or high-voltage gloves and a hotstick, close the disconnects in the incoming line.

15. Reenergize the substation.

K. Remember, when testing high-voltage equipment:

1. **Be sure you understand the circuits!**
2. **Take your time-don't rush!**
3. **Use your head!**
4. **Take a second look!**
5. **Watch out for your buddy!**
6. **If it isn't grounded, it isn't dead!**

These simple precautions may save your life!

Chapter 8

Guidelines for determining overcurrent protection of trolley wires and trolley feeder wires

To determine compliance with 30 CFR 75.1001-1, it is necessary to determine the minimum short circuit current that will flow at appropriate points in the system and to verify that the automatic circuit interrupting devices are adjusted to trip at some value below these minimum short circuit currents. This requires electrical inspectors to make sufficient calculations to determine noncompliance before citing a violation of this section, unless there has been a short circuit in the system and the automatic circuit interrupting device(s) failed to operate and completely deenergize the affected circuit.

A. Determining Track and Trolley Wire Resistance

The resistance values for track, trolley wires, and trolley feeder wires can be obtained from charts and tables; however, calculations based on these theoretical values have been found to be in error by as much as 50 percent. This is due to increased resistance caused by poor bonding, broken rails, high-resistance splices, and worn trolley wire. Such calculations often indicate higher fault currents than would actually be present under short circuit conditions. For example, if an electrical inspector encounters a trolley circuit breaker adjusted to 1800 amperes, and if calculations based on theoretical resistance values taken from charts indicate that only 1500 amperes will flow to a short circuit at the extreme end of the circuit, then a violation would exist. Also, the calculations could indicate that 2000 amperes could flow and a violation could still exist because of increased resistance of the circuit. Consequently, theoretical resistance values can be used to establish a violation but cannot be used to accurately determine compliance. Resistance values for trolley wires, trolley feeder wires, track, and return feeder wires are provided in Appendix I, Tables I-l and I-2.

1. Voltage drop test

   The only accurate, practical method of determining the actual resistance of a trolley circuit is to perform a voltage drop test. This involves passing a known amount of current through the circuit and measuring the voltage drop. The following equipment is required for conducting such tests:

   a. a contactor box containing a size 9 contactor or equivalent;
   b. a 2500-amp, 100-millivolt shunt;
   c. two voltmeters and a millivolt meter;
   d. three 1000-ampere, 0.3-ohm resistors; and
   e. low-voltage gloves.

   Figure 34 shows a typical test configuration for a voltage-drop test.

2. Voltage drop test precautions

Some precautions to be observed when performing voltage drop tests follow:

a. only one rectifier or generator should be used to supply test current;

b. all loads should be removed from the circuit being tested;

c. voltmeter readings should be correlated before conducting the tests; and

d. three individual sets of tests should be performed and the results averaged. The difference between the highest and lowest values should not exceed 5 percent.

3. Voltage drop test procedures

Before conducting the voltage drop test, review the map of the trolley system, select the test locations, and discuss the procedures to be followed with those persons assisting in performing tests.

Two-way communications should be established between positions A and B (see Figure 34). The circuit should be deenergized at position A, and one 0.3-ohm test resistor, the contactor, and shunt should be connected in series between the trolley wire and track at position B.

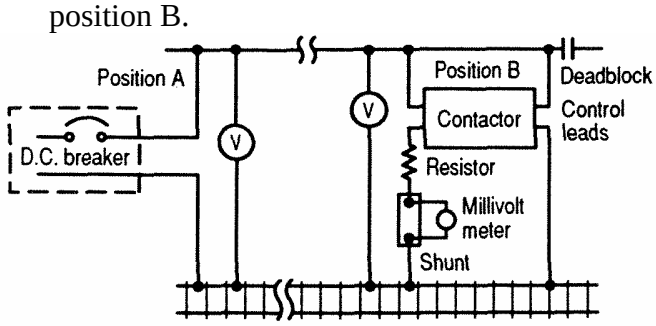

Figure 34.-Test configuration for a voltage-drop test.

The person in charge of the operation should be stationed at position B and should instruct the person at position A to energize the circuit. The contactor at position B should then be closed and the following measurements obtained:

a. voltage at position A (V_A);

b. voltage at position B (V_B);

c. current through resistor at position B(I_B) is calculated by using the following formula:

$$I_B \text{ (current through the shunt)} = \frac{MillivoltDrop}{0.3ohms}$$

Reenergize the circuit and repeat the tests to obtain two additional sets of measurements, all of which will later be averaged. Next, deenergize the system and disconnect the test equipment.

Calculate the total circuit resistance of the trolley wire, trolley feeder wire, track and return feeder wire (R_T) for each test as follows:

$$R_T = \frac{V_A - V_8}{I_B}$$

Calculate the average total resistance for the three tests (R_T(average)) as follows:

$$R_T(average) = \frac{R_T(test1)+(test2)+(test3)}{3}$$

B. Determining the Internal Resistance of a Rectifier

The internal resistance of a rectifier also limits the amount of current that can flow during a short circuit on a trolley circuit. The internal resistance of a rectifier can be calculated from known AC impedances or can be determined using the voltage drop method.

The voltage drop method used to calculate the internal resistance of a rectifier is very similar to the voltage drop method for calculating the trolley circuit resistance. This method is summarized below:

1. Discuss procedures to be followed with those persons assisting in performing the tests.

2. Disconnect the rectifier from the trolley system. It may be necessary to make other adjustments to the trolley system to ensure proper short circuit protection during the tests.

3. Measure DC no-load voltage (V_{NL}) of the rectifier.

4. Deenergize the output of the rectifier and open, lock, and tag the visual disconnecting device.

5. Connect the variable test resistor, contactor, and ammeter shunt, if necessary, on the rectifier output.

6. Energize the output of the rectifier, and operate the contactor to apply the test resistor as a load to the rectifier. Measure the voltage across the test resistor (V_R) and the current flowing through the test resistor (I_T).

7. Repeat steps 4 through 6 to obtain two additional sets of measurements with different values of load current.

8. Repeat step 4 and disconnect the test equipment.

9. Energize the rectifier and connect the output to the trolley system.

10. For each test, calculate the voltage drop (V_D) by subtracting the voltage across the test resistor (V_R) from the no-load voltage of the rectifier (V_{NL}):

$$\mathbf{V_D = V_{NL} - V_R}$$

11. For each test, calculate the internal resistance of the rectifier (R_R) by dividing the voltage drop (V_D) by the load current (I_R):

$$\mathbf{R_R} = \frac{V_D}{I_R}$$

12. Calculate the average internal resistance of the rectifier as follows:

$$\mathbf{R_R\ (average)} = \frac{R_R(test1)+R_R(test2)+R_R(test3)}{3}$$

C. Calculating Available Short Circuit Currents in Stub-Feed Systems

Once the internal resistance of the rectifier and the total track and trolley resistance from the rectifier to the assumed fault location have been determined, the available short circuit current at the assumed fault location can be calculated for simple stub-feed systems (Figure 35) or radial-type, stub-feed systems (Figure 36) as follows:

$$\mathbf{I_{SC}} = \frac{V_{NL}}{R_R + R_T}$$

where I_{SC} = available short circuit current at the assumed fault location

V_{NL} = no load rectifier voltage

R_R = internal resistance of rectifier

R_T = total track and trolley resistance from the rectifier to the assumed fault location

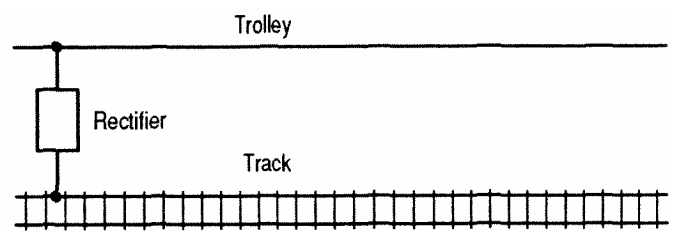

Figure 35.-Simple stub-feed system.

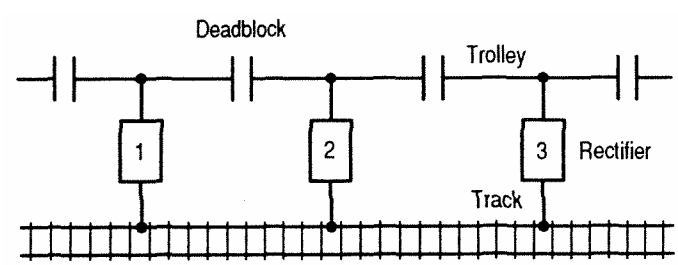

Figure 36 Radial-type stub-feed system.

D. Simplified Method for Determining Available Short Circuit Currents in Stub-Feed Systems

On stub-feed systems shown in Figures 35 and 36, the available short circuit current at any point in the circuit can be readily determined without obtaining values of track, trolley and rectifier resistances. The procedure for this method is described below:

1. Remove all loads from the circuit being tested.

2. Measure the no-load voltage (V_{NL}) at the location where the short circuit current is to be determined.

3. Perform a voltage drop test using the procedures described under the section entitled Determining Track and Trolley Wire Resistance.

4. Measure the current through the test resistor (I_R) and the voltage across the test resistor (V_R).

5. Repeat steps 2 through 4 to obtain two additional sets of measurements with different values of test current.

6. For each test, calculate the voltage drop caused by the test current as follows:

$$\mathbf{V_D = V_{NL} - V_R}$$

7. For each test, calculate the available short circuit current (ISC) at the test location as follows:

$$\mathbf{ISC} = \frac{V_{NL}}{V_D} \ \mathbf{x\ I_R}$$

8. Calculate the average available short circuit current I_{SC} (average) at the test location as follows:

$$\mathbf{I_{SC}\ (average)} = \frac{I_{SC}(test1)+I_{SC}(test2)+I_{SC}(test3)}{3}$$

This method can be used to determine the short circuit currents on the multiple-feed systems described below; however, the test resistor can be supplied only from one direction, and the calculated current will be the total current supplied by all of the rectifiers energized. This method can also be used to determine whether a tie-feeder circuit breaker located between the test location and the nearest rectifier will have sufficient current to trip during a fault, and to locate the areas of a trolley system that should be evaluated by one of the methods described below.

E. Calculating Available Short Circuit Currents in Multiple-Feed Systems

If the trolley system is a radial multiple-feed type with power supplied from two or more rectifiers, then the available short circuit currents must be calculated by Thevenin's equivalent circuit method, simultaneous equations method, or other similar accepted engineering procedures.

Another important feature that must be considered is the type of interconnection of the two or more rectifiers. When the rectifiers are connected together without tie-feeder circuit breakers as shown in Figure 37, it becomes very

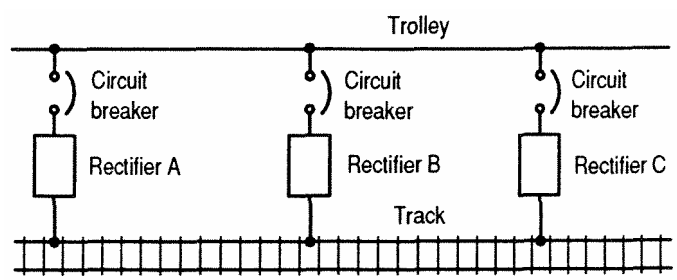

Figure 37.-Radial multiple-feed system without tie-feeder circuit breakers.

impractical to provide adequate short circuit protection because the majority of the fault current will be supplied by the rectifiers that are closest to the fault location. The rest of the rectifiers will supply only a small percentage of the fault current. As the closest rectifiers "trip

out," the short circuit currents are transferred to the remaining rectifiers. Thus, this type of installation requires sequential tripping (with an inherent time delay) of the circuit breakers, which starts at the closest rectifiers. If an arcing fault starts before all the circuit breakers "trip out," then there is a great possibility that all the circuit breakers supplying current to the fault will not detect the short circuit unless the settings have been reduced to include the arcing fault safety factor.

When the rectifiers are connected together with tie-feeder circuit breakers installed at locations between the rectifiers as shown in Figure 38, areas or zones of protection are provided to detect short circuits that may occur. For example, if a fault would occur at rectifier B, or anywhere between the two adjacent tie-feeder circuit breakers, then the two tie-feeder circuit breakers and the circuit breaker at rectifier B must detect the short circuit and deenergize the affected area. The remainder of the trolley system may remain energized. In this type of system, sequential tripping of the circuit breakers must occur, unless sufficient currents flow through the tie-feeder circuit breakers to trip them when the fault first occurs. This

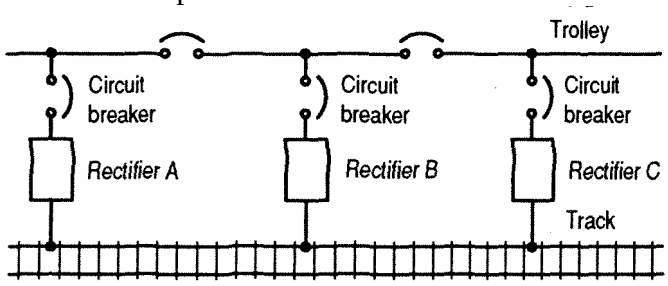

Figure 38.-Radial multiple-feed system containing tie-feeder circuit breakers.

type of system would allow higher circuit breaker settings than the same system without the tie-feeder circuit breakers. An undesirable feature of this installation is that the short circuit protection is diminished when a rectifier that would normally supply the most current through an adjacent tie-feeder circuit breaker to the fault location is deenergized when the fault occurs. The rectifiers at other locations may not be able to supply sufficient current to the fault locations to trip the tie-feeder circuit breaker. Thus, the rectifiers should be installed so that the adjacent tie-feeder circuit breaker is automatically tripped when a rectifier outby the zone of the protection is deenergized, or the remaining rectifiers must be capable of supplying sufficient current to trip the

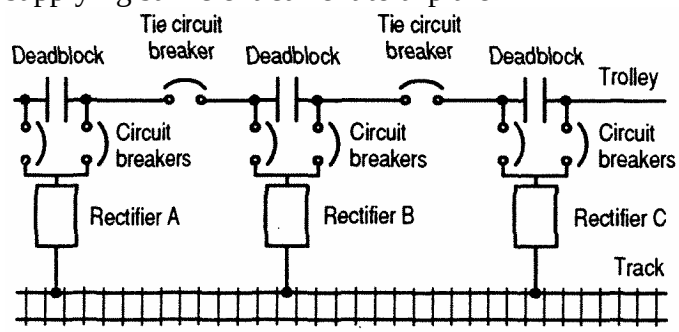

Figure 39.-Radial multiple-feed system using two tie-feeder

tie-feeder circuit breaker when a short circuit occurs.

Another type of system that supplies power to trolley systems uses two tie-feeder circuit breakers that are installed at each rectifier as shown in Figure 39. Additional tie-feeder circuit break-

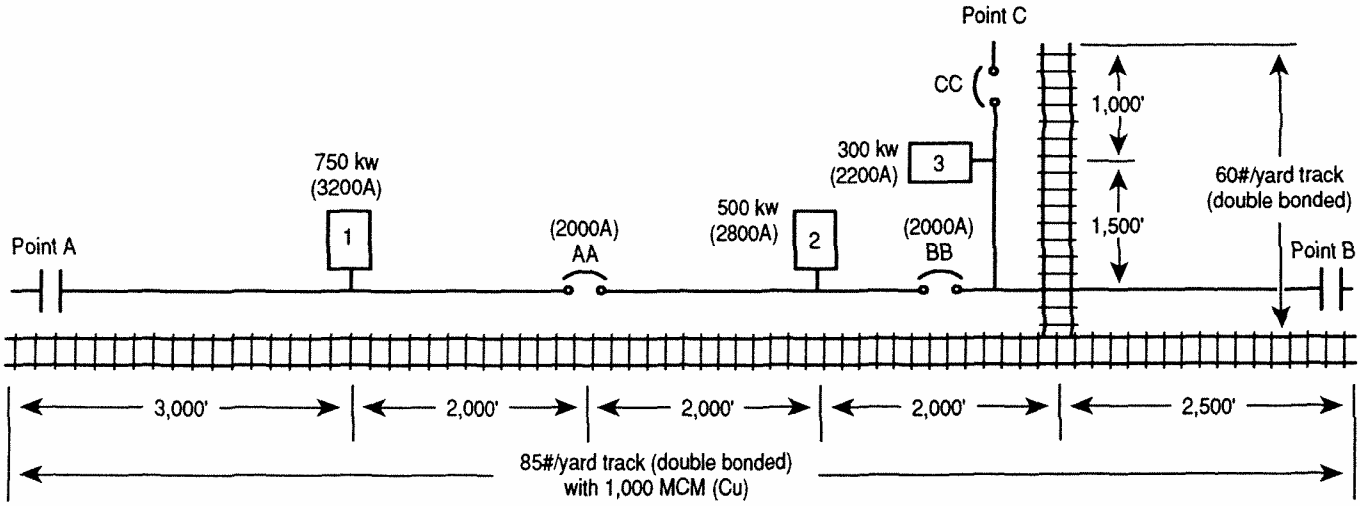

Figure 40.-Radial multiple-feed system for sample problem.

ers may be installed between the rectifiers. This would allow the circuit breakers located at the rectifiers to have higher overcurrent settings. With this type of installation, one or both of the tie-feeder circuit breakers located at the rectifier must "trip out" when the rectifier is deenergized. Otherwise, the remaining rectifiers must supply sufficient current to "trip out" the appropriate circuit breakers so that the fault area is properly protected.

For a multiple-feed system, inspectors can determine compliance using the following approximate method. This method allows the equivalent circuit of a multiple-feed system to be simplified so that only a single voltage source is used in the calculations. The source voltage is assumed to be equal to the no-load voltage of the rectifier closest to the fault. (See Figures 39 and 40.)

Next, the resistances of both the trolley and track circuits between all adjacent locations are added. After adding the respective trolley and track resistances, the simplified circuit is obtained by connecting the source resistances of the two closest rectifiers to the single voltage source which was selected above. The remaining rectifiers supply very little current to the fault location and their contribution can usually be neglected with little error. The resulting circuit will then consist of only series-parallel connections of resistances. The circuit can then be further simplified to obtain the total resistance from the assumed voltage source to the fault location. The fault current can then be calculated by the formula:

$$\mathbf{I} = \frac{V}{Rtotal}$$

This calculated value will be the total fault current flowing to the fault location. The current flowing from each rectifier can be determined by using Ohm's Law once the voltage at each rectifier has been determined. The currents determined by this set of calculations can be used to determine which circuit breakers will trip when a fault occurs at that location in the system. If the faulted circuit is not deenergized in the first tripping cycle, then an additional set of calculations must be made using the second and third rectifiers from the fault location. The voltage source is then assumed to be the no-load voltage of the next rectifier.

Examples of both the simplified method and the method of using simultaneous loop equations to calculate the available fault currents on a multiple-feed system are presented below:

1. Solution by Simplified Method:

   a. For a fault at point A, select the source voltage to be equal to 320 volts.

   b. Since the trolley and track resistances were determined by voltage drop tests, the respective track and trolley resistances between all adjacent locations have been added.

   c. By connecting the two source resistances of rectifiers Nos. 1 and 2, this simplified circuit can be drawn:

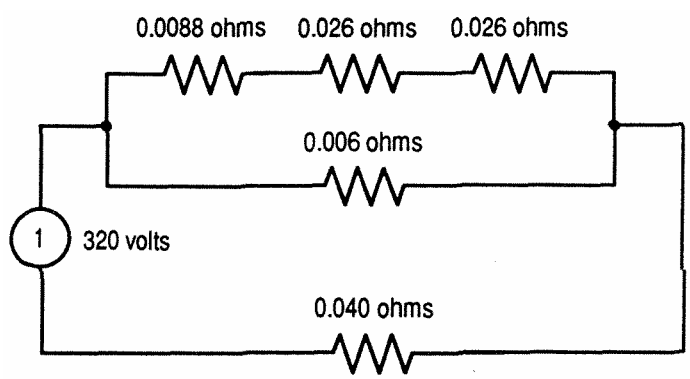

   d. Add the series resistances:

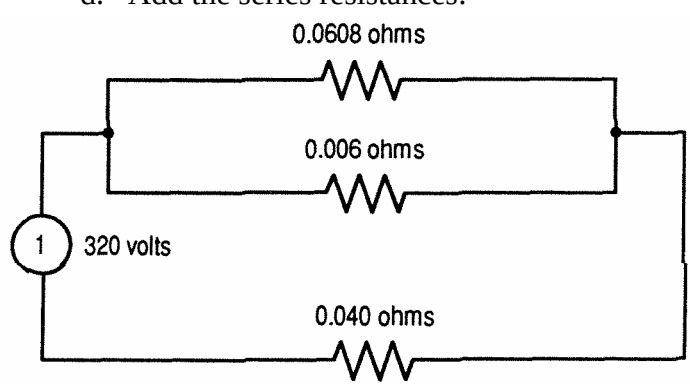

e. Combine the parallel resistances:

$$R_{eq} = \frac{(0.0608)(0.006)}{(0.0608) + (0.006)} = \frac{0.0003648}{0.0668} = 0.00546 \text{ ohms}$$

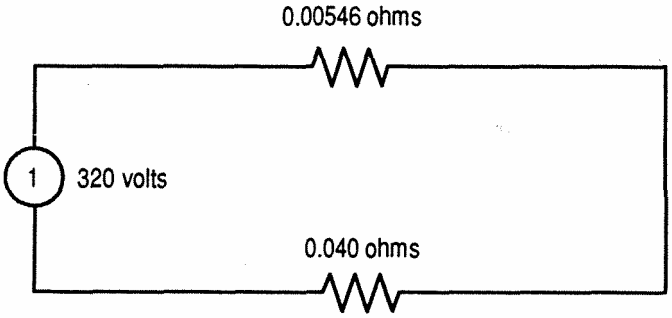

f. Add the series resistances:

$$R_{total} = 0.00546 + 0.040 = 0.04546 \text{ ohms}$$

g. Calculate the total fault current:

$$I = \frac{V}{R_t} = \frac{320}{0.04546} = 7039 \text{ amps}$$

h. Calculate the voltage drop across the 0.040 ohm resistance:

$$V = I \times R$$

$$V = (7039)(0.040)$$

$$V = 281.6 \text{ volts}$$

i. Thus, the No. 1 rectifier has an internal voltage drop of 38.4 volts:

$$(V_{int} = 320 - 281.6 = 38.4 \text{ volts})$$

j. Calculate the current flowing from the No. 1 rectifier by using the source resistance of 0.006 ohms:

$$I_1 = \frac{V_{int}}{R_s} = \frac{38.4}{0.006} = 6400 \text{ amps}$$

k. The current from the No. 2 rectifier can be found by subtracting the current from the No. 1 rectifier from the total fault current:

$$I_2 = 7039 - 6400 = 639 \text{ amps}$$

The circuit breaker at the No. 1 rectifier will trip since the setting of the overload device is 3200 amps and the actual current is 6400 amps. However, the circuit breaker at location AA will not trip since the setting is 2000 amps and the actual current is 639 amps. Thus, the fault is not deenergized during the first tripping cycle. An additional set of calculations must be used to determine if the fault location will be deenergized after the second tripping cycle.

The simplified circuit is shown below:

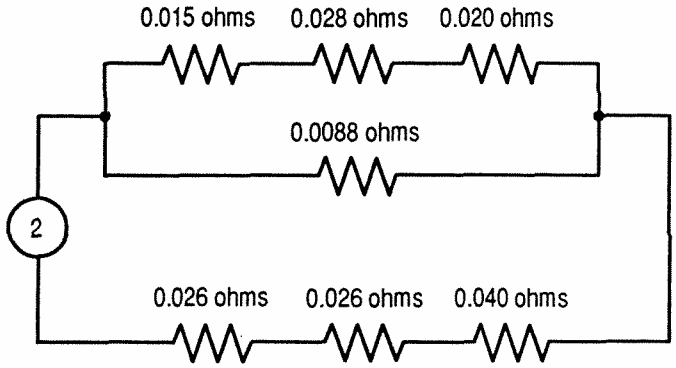

l. Add the series resistances:

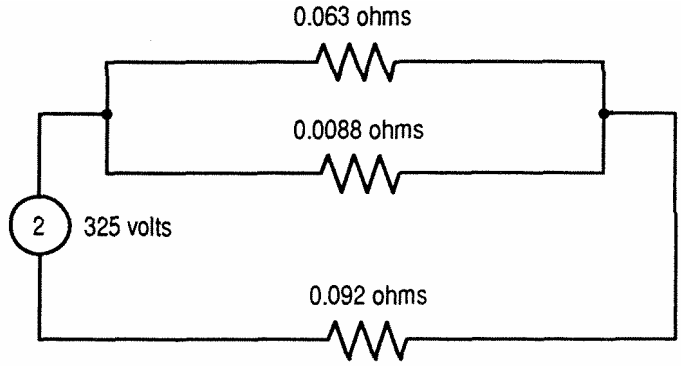

m. Combine the parallel resistances:

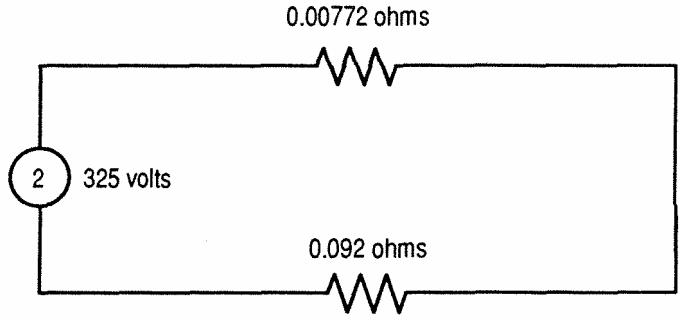

n. Add the resistances to obtain the total resistance:

$$R_{total} = 0.09972 \text{ ohms}$$

o. Calculate the total fault current:

$$I = \frac{V}{R} = \frac{325}{0.09972} = 3259 \text{ amps}$$

p. Calculate the voltage drop across the 0.092 ohm resistance:

$$V = I \times R = (3259)(0.092) = 299.84 \text{ volts}$$

q. Thus, the No. 2 rectifier has a voltage drop of 25.16 volts:

$$V_{int} = 325 - 299.84 = 25.16 \text{ volts}$$

r. Calculate the current flowing from the No. 2 rectifier by using the source resistance of 0.0088 ohms:

$$I_2 = \frac{V_{int}}{R_s} = \frac{25.16}{0.0088} = 2859 \text{ amps}$$

s. The current from the No. 3 rectifier can be found by subtracting the current from the No. 2 rectifier from the total fault current:

$$I_3 = 3259 - 2859 = 400 \text{ amps}$$

The circuit breaker at location AA will trip since the setting of the overload device is 2000 amps and the actual current is 3259 amps.

Thus, the fault would be deenergized after the second tripping cycle, provided that rectifier No. 2 is energized. If rectifier No. 2 is deenergized when the fault first occurs, the fault location may not be deenergized, since approximately 2100 amps will flow from the No. 3 rectifier after the first tripping cycle. One of the tie-feeder circuit breakers located between rectifier No. 3 and the fault location should have a setting of 1575 amps (75 percent of 2100 amps).

If a fault occurs at location B, the following currents can be obtained:

Rectifier No. 2	***- 4607 amps***
Rectifier No. 3	***- 3086 amps***
Total fault current	***- 7693 amps***
Circuit breaker BB	***- 4507 amps***

The fault will be deenergized after the first tripping cycle.

If a fault occurs at location C, the following currents can be obtained:

Rectifier No. 2	***- 2200 amps***
Rectifier No. 3	***- 8330 amps***
Total fault current	***- 10530 amps***
Circuit breaker BB	***- 2200 amps***
Circuit breaker CC	***- 10530 amps***

The fault will be deenergized after the first tripping cycle.

From the above calculations, it can be determined that a fault at location A when rectifier Nos. 1 and 2 are deenergized is the worst-case condition for this example. If one of the two tie-feeder breakers at locations AA and BB are set low enough to trip under such a condition, the system would be considered in compliance.

2. Solution by Simultaneous Loop Equations:

The method of solving loop equations will be used to determine the fault currents at the various fault locations A, B, and C. First, selecting the currents such that the currents flow from each rectifier to the fault at location A, the following equations may be written:

a. $320 = 0.006\,(I_1) + 0.040\,(I_1 + I_2 + I_3)$

b. $325 = 0.0088\,(I_2) + 0.052\,(I_2 + I_3) + 0.040\,(I_1 + I_2 + I_3)$

c. $325 = 0.015\,(I_3) + 0.048\,(I_3) + 0.052\,(I_2 + I_3) + 0.040\,(I_1 + I_2 + I_3)$

Simplifying the three equations:

d. $320 = 0.046\,I_1 + 0.040\,I_2 + 0.040\,I_3$

e. $325 = 0.040\,I_1 + 0.1008\,I_2 + 0.092\,I_3$

f. $325 = 0.040\,I_1 + 0.0922\,I_2 + 0.155\,I_3$

Solving the three simultaneous equations for a, b, and c, we find:

$I_1 = 6327$ *amps*

$I_2 = 627$ *amps*

$I_3 = 92$ *amps*

If problems are encountered in calculating short circuit currents in complex trolley systems, the assistance of an electrical engineer should be requested.

F. Load-Measuring and Voltage-Differential Circuits

When electrical inspectors observe reclosing circuit breakers are not equipped with load-measuring and voltage-differential circuits properly adjusted to afford the intended protection, a Notice to Provide Safeguards should be issued under 30 CFR 75.1403, requiring that load-measuring circuits be adjusted at or below 300 amperes and that voltage-differential circuits be adjusted at or above 85 percent of the system voltage. Electrical inspectors may allow higher load-measuring settings and lower voltage-differential settings if an investigation reveals that such settings are warranted and if the hazard to miners is not increased.

G. Trolley System Testing Procedures

If there is doubt that the required testing is being properly conducted, electrical inspectors should witness the testing of a representative number of circuit breakers. In accordance with 30 CFR 75.1001-1(b), an inspector may require additional testing of trolley circuit breakers if the adequacy of a circuit breaker is in question; electrical inspectors should require an immediate test of the circuit breaker. Figure 41 shows a typical test configuration for load testing a trolley circuit breaker.

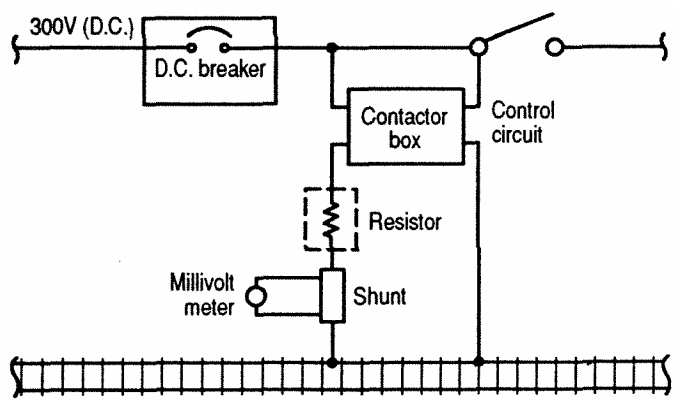

Figure 41.-Test configuration for load testing a trolley circuit breaker.

H. Movement of Off-Track Equipment

If the inspector determines that off-track mining equipment has been moved where energized trolley or trolley feeder wires are present and the required precautions have not been taken, only one citation, 30 CFR 75.1003-2, should be issued for each occurrence. Suggested wording for the citation is "The required precautions for transportation of off-track mining equipment in the presence of energized trolley wires and trolley feeder wires were not taken prior to and during transportation of a Joy 21SC shuttle car in the 2 north main haulage entry in that:

1. the shuttle car was not examined by a certified person;

2. a qualified person did not examine the trolley wires, trolley feeder wires, and automatic circuit interrupting devices; and

3. a minimum vertical clearance of 12 inches was not maintained between the top of the shuttle car and the trolley wire; and

   a. a miner, in direct communication with the persons transporting the shuttle car, was not stationed outby the shuttle car as it was being transported; and

   b. persons, other than those engaged in transporting the shuttle car, were permitted in the current of air passing over the shuttle car and inby the shuttle car as it was being transported."

When MSHA receives allegations that off-track mining equipment has been permitted to contact energized trolley wire or trolley feeder wire, an electrical engineer or electrical inspector should conduct the investigation.

When a citation of 30 CFR 75.1003-2 is issued for failure to comply with the requirements listed under 30 CFR 75.1003-2(a)(2), an electrical engineer or electrical inspector should inspect the system to determine whether short circuit protection exists.

When a citation of 30 CFR 75.1003-2 is issued for failure to comply with the requirements listed under 30 CFR 75.1003-d(f)(1)(i) or 75.1003-2(f)(l)(ii), an electrical engineer or electrical inspector should make a sketch of the DC circuit and, if applicable, the high-voltage system. The sketch should show the direction from which power is supplied, location of equipment at time of violation, and location of the DC circuit breaker. If applicable, the sketch should show the location of the controls the miner is to use to cut off power when supplied from inby the equipment being moved.

When a citation of 30 CFR 75.1003-2 is issued for failure to comply with the requirements listed under 30 CFR 75.1003-2(f)(2), the electrical engineer or electrical inspector should determine the maximum short circuit current that could flow if the equipment being moved or

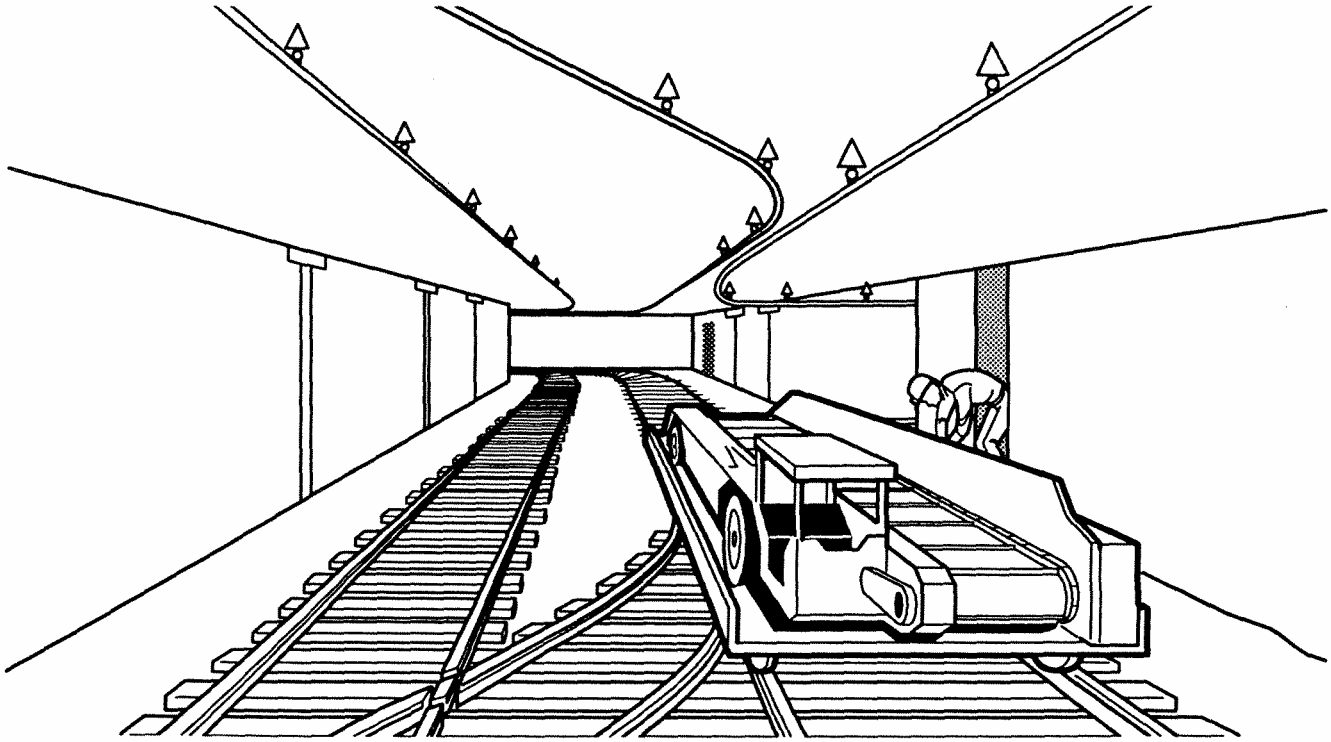

Figure 42.-Transporting off-track equipment under trolley wire.

Transported were to contact the trolley wire or trolley feeder wire. This value of short circuit current must be known before a determination can be made as to whether the circuit breakers are properly adjusted to one-half the maximum short circuit current.

Failure to keep the record required by 30 CFR 75.1003-2(b) is not, in itself, proof that the required examinations by certified and qualified persons were not made.

When the trolley wire and trolley feeder wire are 12 inches horizontally from the equipment being moved, the equipment almost always passes under turnouts where the trolley wire and trolley feeder wire will be directly over the equipment being moved. Therefore, 12 inches

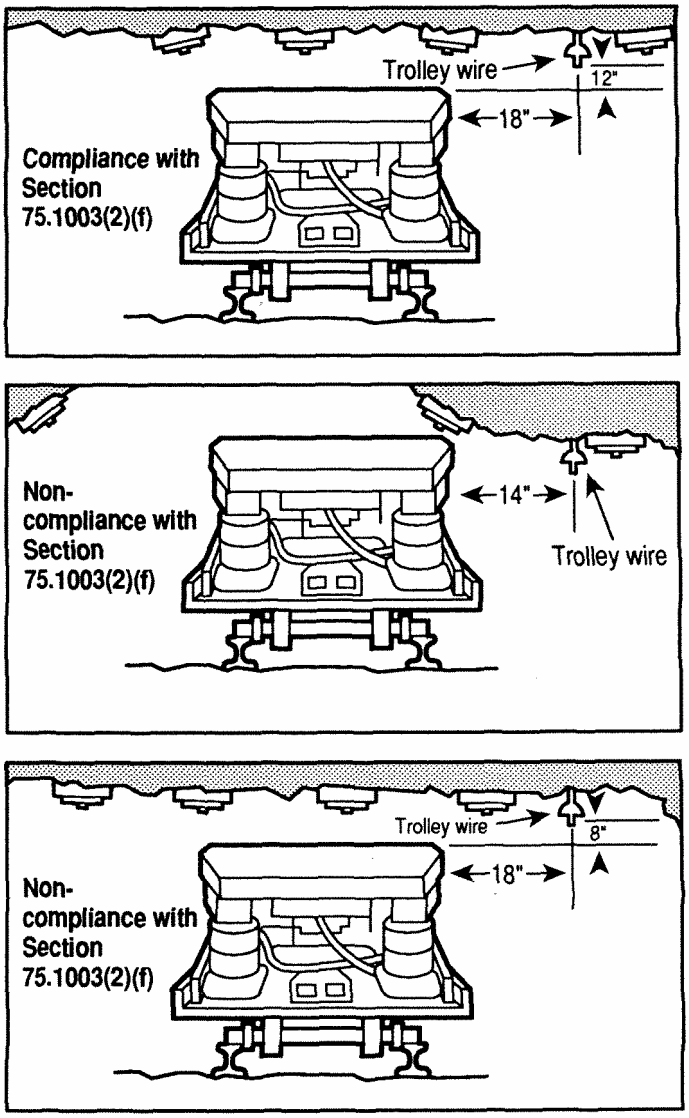

Figure 43.-Determining 12-inch vertical clearance.

Horizontal clearance is not acceptable as compliance with 30 CFR 75.1003-2(f). (See Figure 42.)

The measurement of 12 inches vertical clearance shall be determined by measuring vertically from the trolley wire to a perpendicular line intersecting with the highest projection on the equipment being moved. (See Figures 43 and 44.)

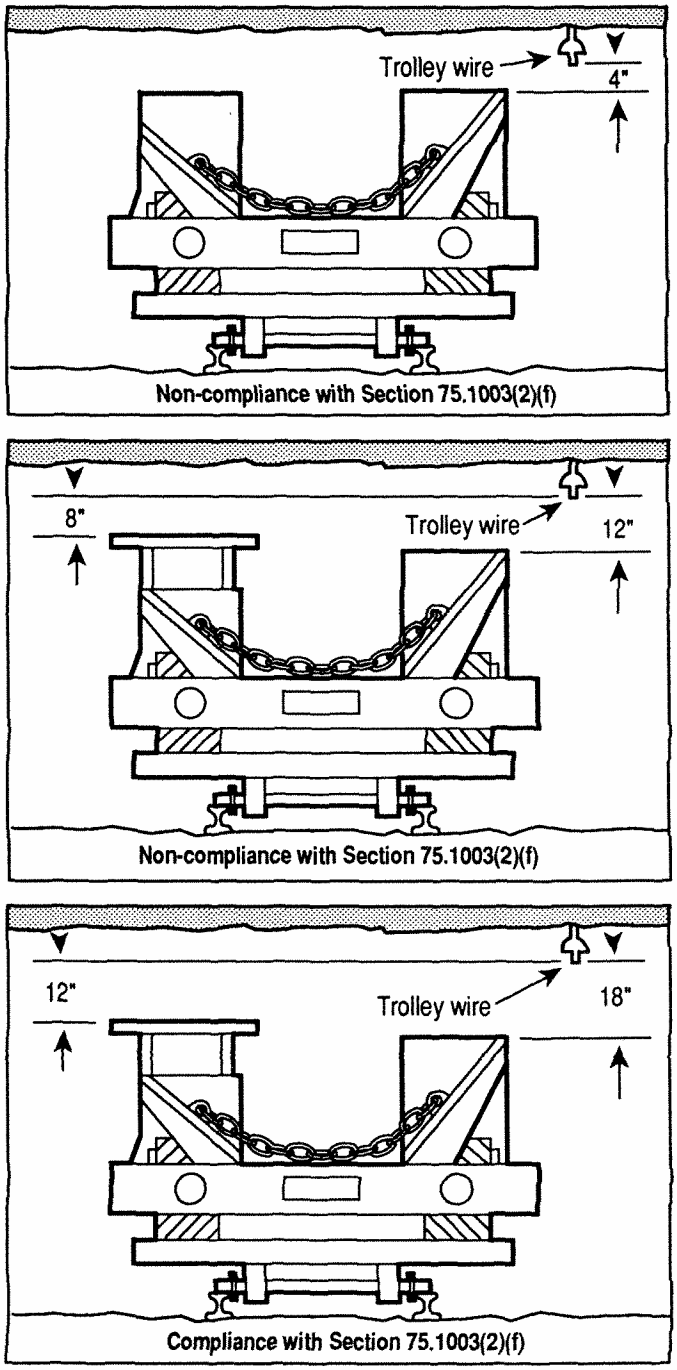

Figure 44.-Determining 12-inch vertical clearance over equipment with a canopy.

APPENDIX A

Ampacity tables for portable cords, portable power cables, and mine power cables manufactured in accordance with the Insulated Cable Engineers Association (ICEA) Standards

TABLE A-1.–Ampacities for 0-200 volt portable cords and power cables with insulation temperature ratings of 75 degrees Celsius, unshielded copper conductors

Conductor Size AWG or MCM	Ampacities* Number of current-carrying conductors 1	2	3
**14		20	17
**12		28	22
**10		33	28
8	75	63	63
6	106	81	81
4	138	113	106
3	163	131	125
2	188	150	144
1	213	175	163
1/0	250	213	181
2/0	294	244	213
3/0	344	281	244
4/0	394	325	275
250	438	356	306
300	494	388	344
350	556	419	381
400	600	450	406
500	681	519	469

*Ampacities are based on an ambient temperature of 20 degrees Celsius. To determine ampacities at other ambient temperatures, see table A-7.

**Maximum voltage ratings are (1) 600 volts for S, SO, ST, and STO cables, and (2) 300 volts for SJ, SJO, SJT, and SJTO cables.

SOURCE: ***Rubber-Insulated Wire and Cable for the Transmission and Distribution of Electrical Energy.*** Insulated Cable Engineers Association, Publication No. S-19-81, National Electrical Manufacturers Association Publication No. WC 3-1980.

TABLE A-2.–Ampacities for 0-2,000 volt portable cords and portable cables with insulation temperature ratings of 90 degrees Celsius, unshielded copper conductors

Conductor Size AWG or MCM	Ampacities* Number of current-carrying conductors 1	2	3
**14		20	17
**12		28	22
**10		33	28
8	98	85	70
6	129	112	93
4	171	150	123
3	197	171	142
2	227	197	163
1	263	225	190
1/0	304	256	219
2/0	352	295	254
3/0	407	337	294
4/0	472	387	329
250	525	428	378
300	590	472	421
350	651	514	465
400	708	555	507
500	820	618	575

*Ampacities are based on an ambient temperature of 20 degrees Celsius. To determine ampacities at other ambient temperatures, temperatures, see table A-7.

**Maximum voltage ratings are (1) 600 volts for S, SO, ST, and STO cords, and (2) 300 volts for SJ, SJO, SJT, and SJTO cords.

SOURCE: ***Ethylene-Propylene-Rubber-Insulated Wire and Cable for the Transmission and Distribution of Electrical Energy.*** Insulated Cable Engineers Association, Publication No. S-68-516, National Electrical Manufactures Association Publication No. WC 8-1976.

TABLE A-3.–Ampacities for 2,001-15,000 volt portable power cables with insulation temperature ratings of 75 degrees Celsius, shielded copper conductors

Conductor size AWG or MCM	Ampacities* Number of current-carrying conductors 1		3	
	2001-5000 V	5001-15000V	2001-5000 V	5001-15000 V
8	75	88	63	69
6	105	119	81	88
4	138	150	106	119
3	163	175	125	131
2	188	206	144	156
1	213	238	163	175
1/0	250	269	181	206
2/0	294	306	213	238
3/0	344	356	244	269
4/0	394	413	275	306
250	438	450	306	
300	494	506	344	
350	556	556	381	
400	600	606	406	
500	681	694	469	

* Ampacities are based on an ambient temperature of 20 degrees Celsius. To determine ampacities at other ambient temperatures, see Table A-7.

SOURCE: ***Rubber-Insulated Wire and Cable for the Transmission and Distribution of Electrical Energy.*** Insulated Cable Engineers Association, Publication No. S-19-81, National Electric Manufacturers Association Publication No. WC 3-1980.

TABLE A-4.–Ampacities for 0-15,000 volt portable power cables with insulation temperature ratings of 90 degrees Celsius, shielded copper conductors

Conductor size AWG or MCM	Ampacities* Number of current-carrying conductors 1		3	
	2001-8000 V	8001-15000 V	0-8000 V	8001-15000 V
8				
6	132		110	
4	175		144	
3	202		165	
2	230	230	188	210
1	266	266	217	225
1/0	307	306	249	254
2/0	353	352	287	290
3/0	407	405	329	334
4/0	472	468	379	384
250	524	519	419	424
300	585	579	470	
350	648	641	513	
400	703	696	555	
500	812	800	632	

* Ampacities are based on an ambient temperature of 20 degrees Celsius. To determine ampacities at other ambient temperatures, see Table A-7.

SOURCE: ***Ethylene-Propylene-Rubber-Insulated Wire and Cable for the Transmission and Distribution of Electrical Energy.*** Insulated Cable Engineers Association, Publication No. S-68-516, National Electrical Manufacturers Association Publication No. WC 8-1976.

TABLE A-5.–Ampacities for 2,001-15,000 volt, three-conductor, mine power cables, shielded copper conductors

Conductor size AWG or MCM	Ampacities* 2001-8000 V 75°C	85°C	90°C	8001-15000 V 70°C	85°C	90°C
6	99	107	110			
4	130	139	144			
2	170	182	188	168	187	194
1	196	210	217	192	215	221
1/0	226	242	249	221	247	254
2/0	260	278	287	253	282	290
3/0	299	320	329	290	324	334
4/0	343	367	379	333	372	384
250	379	407	419	368	410	424
300	423	454	470	409	456	473
350	465	499	513	449	502	517
400	500	538	555	482	539	558
500	571	614	632	548	613	632

* Ampacities are based on an ambient temperature of 20 degrees Celsius. To determine ampacities at other temperatures, see Table A-7.

SOURCE: ***Rubber-Insulated Wire and Cable for the Transmission and Distribution of Electrical Energy.*** Insulated Cable Engineers Association, Publication No. S-19-81, National Electrical Manufacturers Association Publication No. WC 3-1980.

Ethylene-Propylene-Rubber-Insulated Wire and Cable for the Transmission and Distribution of Electrical Energy. Insulated Cable Engineers Association, Publication No. WC 8-1976.

TABLE A-6.–Ampacities for 2,001-15,000 volt, three-conductor mine power cables, shielded aluminum conductors

Conductor size AWG or MCM	Ampacities* 2001-8000 V 75°C	85°C	90°C	8001-15000 V 70°C	85°C	90°C
4	101	109	112			
2	133	143	146	132	146	
1	153	164		151	168	
1/0	176	188	195	173	192	198
2/0	203	217	223	197	221	227
3/0	234	251	257	227	253	261
4/0	269	288	296	261	290	300
250	298	319	328	288	322	332
350	366	392	404	353	395	406
400	396	424	425	381	425	433
500	458	487	502	435	486	500

* Ampacities are based on an ambient temperature of 20 degrees Celsius. To determine ampacities at other temperatures, see Table A-7.

SOURCE: ***Rubber-Insulated Wire and Cable for the Transmission and Distribution of Electrical Energy.*** Insulated Cable Engineers Association, Publication No. S-19-81, National Electrical Manufacturers Association Publication No. WC 3-1980.

Ethylene-Propylene-Rubber-Insulated Wire and Cable for the Transmission and Distribution of Electrical Energy. Insulated Cable Engineers Association, Publication No. WC 8-1976.

TABLE A-7.–Correction for ICEA ampacities at ambient temperatures over 20°C

Ambient temperature	Correction factors 70°C	75°C	85°C	90°C
20°C	1.00	1.00	1.00	1.00
30°C	0.89	0.90	0.92	0.93
40°C	0.78	0.80	0.83	0.85

SOURCE: ***Rubber-Insulated Wire and Cable for the Transmission and Distribution of Electrical Energy.*** Insulated Cable Engineers Association, Publication No. S-19-81, National Electrical Manufacturers Association Publication No. WC 3-1980.

Ethylene-Propylene-Rubber-Insulated Wire and Cable for the Transmission and Distribution of Electrical Energy. Insulated Cable Engineers Association, Publication No. WC 8-1976.

APPENDIX B

Ampacity tables for power conductors from the National Electrical Code, 1968

TABLE B-1.—Ampacities of insulated copper conductors, not more than three conductors in raceway or cable or direct burial (based on ambient temperature of 30 degrees Celsius)

Size	Temperature rating of conductor						
AWG MCM	60°C 140°F	75°C 167°F	85°C 185°F	90°C 194°F	110°C 230°F	125°C 257°F	200°C 392°F
	Types RUW 14-2, T TW	*Types* RH RHW RUH 14-2, THW THWN, XHHW	*Types* V MI	*Types* TA TBS, SA, AVB, SIS, FEP, FEPB, RHH THHN XHHW	*Types* AVA AVL	*Types* AI 14-8 ALA	*Types* A 14-8 AA FEP FEPB
14	15	15	25	25	30	30	30
12	20	20	30	30	35	40	40
10	30	30	40	40	45	50	55
8	40	45	50	50	60	65	70
6	55	65	70	70	80	85	95
4	70	85	90	90	105	115	120
3	80	100	105	105	120	130	145
2	95	115	120	120	135	145	165
1	110	130	140	140	160	170	190
0	125	150	155	155	190	200	225
00	145	175	185	185	215	230	250
000	165	200	210	210	245	265	285
0000	195	230	235	235	275	310	340
250	215	255	270	275	315	335	—
300	240	285	300	300	345	380	—
350	260	310	325	325	390	420	—
400	280	335	360	360	420	450	—
500	320	380	405	405	470	500	—
630	355	420	455	455	525	545	—
700	385	460	490	490	560	600	—
750	400	475	500	500	580	620	—
800	410	490	515	515	600	640	—
900	435	520	555	555	—	—	—
1000	455	545	585	585	680	730	—
1250	495	590	645	645	—	—	—
1500	520	625	700	700	785	—	—
1750	545	650	735	735	—	—	—
2000	560	665	775	775	840	—	—

SOURCE: ***National Electrical Code, 1968 Edition, (NFPA No. 70-1968; USAS C-1 1968)***, National Fire Protection Association

TABLE B-2.—Ampacities of insulated copper conductors, single conductor in free air (based on ambient temperature of 30°C/86°F)

Size	Temperature rating of conductor							
AWG MCM	60°C 140°F	75°C 167°F	85°C 185°F	90°C 194°F	110°C 230°F	125°C 257°F	200°C 392°F	
	Types RUW 14-2, T TW	*Types* RH RHW RUH 14-2, THW THWN, XHHW	*Types* V MI	*Types* TA TBS, SA, AVB, SIS, FEP, FEPB, RHH THHN XHHW	*Types* AVA AVL	*Types* AI 14-8 ALA	*Types* A 14-8 AA FEP FEPB	Bare and covered conductors
14	20	20	30	30	40	40	45	30
12	25	25	40	40	50	50	55	40
10	40	40	55	55	65	70	75	55
8	55	65	70	70	85	90	100	70
6	80	95	100	100	120	125	135	100
4	105	125	135	135	160	170	180	130
3	120	145	155	155	180	195	210	150
2	140	170	180	180	210	225	240	175
1	165	195	210	210	245	265	280	205
0	195	230	245	245	285	305	325	235
00	225	265	285	285	330	355	370	275
000	260	310	330	330	385	410	430	320
0000	300	360	385	385	445	475	510	370
250	340	405	425	425	495	530	—	410
300	375	445	480	480	555	590	—	460
350	420	505	530	530	610	655	—	510
400	455	545	575	575	665	710	—	555
500	515	620	660	660	765	815	—	630
630	575	690	740	740	855	910	—	710
700	630	755	815	815	940	1005	—	780
750	655	785	845	845	985	1045	—	810
800	680	815	880	880	1020	1085	—	845
900	730	870	940	940	—	—	—	905
1000	780	935	1000	1000	1165	1240	—	965
1250	890	1065	1130	1130	—	—	—	—
1500	980	1175	1260	1260	1450	—	—	1215
1750	1070	1280	1370	1370	—	—	—	—
2000	1155	1385	1470	1470	1715	—	—	1405

SOURCE: ***National Electrical Code, 1968 Edition, (NFPA No. 70-1968; USAS C-1 1968)***, National Fire Protection Association

TABLE B-3.—Ampacities of insulated aluminum conductors, not more than three conductors in raceway or cable or direct burial (based on ambient temperature of 30°C/86°F)

Size	Temperature rating of conductor						
AWG MCM	60°C 140°F	75°C 167°F	85°C 185°F	90°C 194°F	110°C 230°F	125°C 257°F	200°C 392°F
	Types RUW 14-2, T TW	*Types* RH RHW RUH 12-2, THW THWN, XHHW	*Types* V MI	*Types* TA TBS, SA, AVB, SIS, RUH THHN XHHW	*Types* AVA AVL	*Types* AI 12-8 AIA	*Types* A 12-8 AAA
12	15	15	25	25	25	30	30
10	25	25	30	30	30	40	45
8	30	40	40	40	45	50	55
6	40	50	55	55	60	65	75
4	55	65	70	70	80	90	95
3	65	75	80	80	95	100	115
2	75	90	95	95	105	115	130
1	85	100	110	110	125	135	150
0	100	120	125	125	150	160	180
00	110	135	145	145	170	180	200
000	130	155	165	165	195	210	225
0000	155	180	185	185	215	245	270
250	170	205	215	215	250	270	—
300	190	230	240	240	275	305	—
350	210	250	260	260	310	335	—
400	225	270	290	290	335	360	—
500	260	310	330	330	380	405	—
600	285	340	370	370	425	440	—
700	310	375	395	395	455	485	—
750	320	385	405	405	470	500	—
800	330	395	415	415	485	520	—
900	355	425	455	455	—	—	—
1000	375	445	480	480	560	600	—
1250	405	485	530	530	—	—	—
1500	435	520	580	580	650	—	—
1750	455	545	615	615	—	—	—
2000	470	560	650	650	705	—	—

SOURCE: ***National Electrical Code, 1968 Edition, (NFPA No. 70-1968; USAS C-1 1968)***, National Fire Protection Association

TABLE B-4.—Ampacities of insulated copper conductors, single conductor in free air (based on ambient temperature of 30°C/86°F)

Size	Temperature rating of conductor							
AWG MCM	60°C 140°F	75°C 167°F	85°C 185°F	90°C 194°F	110°C 230°F	125°C 257°F	200°C 392°F	
	Types RUW 14-2, T TW	*Types* RH RHW RUH 12-2, THW THWN, XHHW	*Types* V MI	*Types* TA TBS, SA, AVB, SIS, RHH THHN XHHW	*Types* AVA AVL	*Types* AI 12-8 AIA	*Types* A 12-8 AA	Bare and covered conductors
12	20	20	30	30	40	40	45	30
10	30	30	45	45	50	55	60	45
8	45	55	55	55	65	70	80	55
6	60	75	80	80	95	100	105	80
4	80	100	105	105	125	135	140	100
3	95	115	120	120	140	150	165	115
2	110	135	140	140	165	175	185	135
1	130	155	165	165	190	205	220	160
0	150	180	190	190	220	240	255	185
00	175	210	220	220	255	275	290	215
000	200	240	255	255	300	320	335	250
0000	230	280	300	300	345	370	400	290
250	265	315	330	330	385	415	—	320
300	290	350	375	375	435	460	—	360
350	330	395	415	415	475	510	—	400
400	355	425	450	450	520	555	—	435
500	405	485	515	515	595	635	—	490
600	455	545	585	585	675	720	—	560
700	500	595	645	645	745	795	—	615
750	515	620	670	670	775	825	—	640
800	535	645	695	695	805	855	—	670
900	580	700	750	750	—	—	—	725
1000	625	750	800	800	930	990	—	770
1250	710	855	905	905	—	—	—	—
1500	795	950	1020	1020	1175	—	—	985
1750	875	1050	1125	1125	—	—	—	—
2000	960	1150	1220	1220	1420	—	—	1165

SOURCE: ***National Electrical Code, 1968 Edition, (NFPA No. 70-1968; USAS C-1 1968)***, National Fire Protection Association

TABLE B-5.—Correction factors for National Electrical Code, 1968, ampacities at ambient temperatures over 30°C/86°F

C.	F.	60°C 140°F	75°C 167°F	85°C 185°F	90°C 194°F	110°C 230°F	125°C 257°F	200°C 392°F
40	104	.82	.88	.90	.90	.94	.95	—
45	113	.71	.82	.85	.85	.90	.92	—
50	122	.58	.75	.80	.80	.87	.89	—
55	131	.67	.67	.74	.74	.83	.86	—
60	140	—	.58	.67	.67	.79	.83	.91
70	158	—	.35	.52	.52	.71	.76	.87
75	167	—	—	.43	.43	.66	.72	.86
80	176	—	—	.30	.30	.61	.69	.84
90	194	—	—	—	—	.50	.61	.80
100	212	—	—	—	—	—	.51	.77
120	248	—	—	—	—	—	—	.69
140	284	—	—	—	—	—	—	.59

SOURCE: ***National Electrical Code. 1968 Edition, (NFPA No. 70- 1968; USAS C-I 1968).*** National Fire Protection Association

APPENDIX C

Full-load currents in amperes, direct current motors

Table C-I.—Full-load currents in amperes, direct-current motors

The following values of full-load currents are for motors running at base speed:

HP	120V	240V
1/4	2.9	1.5
1/3	3.6	1.8
1/2	5.2	2.6
3/4	7.4	3.7
1	9.4	4.7
1-1/2	13.2	6.6
2.0	17.0	8.5
3.0	25.0	12.2
5.0	40.0	20.0
7-1/2	58.0	29.0
10.0	76.0	38.0
15.0		55.0
20.0		72.0
25.0		89.0
30.0		100.0
40.0		140.0
50.0		173.0
60.0		206.0
75.0		255.0
100.0		341.0
125.0		425.0
150.0		506.0
200.0		675.0

SOURCE: ***National Electrical Code. 1968 Edition (NFPA No. 7-1968; USAS C1-1968)***, National Fire Protection Association

Table C-2.—Full-load currents in amperes, single-phase alternating-current motors

The following values of full-load currents are for motors running at usual speeds and motors with normal torque characteristics. Motors built for especially low speeds or high torques may have higher full-load currents, and multispeed motors will have full load current varying with speed, in which case the name plate current ratings shall be used.

To obtain full-load currents of 208- and 200-volt motors, increase corresponding 230-volt motor full-load currents by 10 and 15 percent, respectively.

The voltages listed are rated motor voltages. Corresponding nominal system voltages are 110 to 120 and 220 to 240.

HP	115V	230V
1/6	4.4	2.2
1/4	5.8	2.9
1/3	7.2	3.6
1/2	9.8	4.9
3/4	13.8	6.9
1.0	16.0	8.0
1-1/2	20.0	10.0
2.0	24.0	12.0
3.0	34.0	17.0
5.0	56.0	28
7-1/2	80.0	40.0
10.0	100.0	50.0

SOURCE: ***National Electrical Code. 1968 Edition (NFPA No. 7-1968; USAS C1-1968).*** National Fire Protection Association

Table C-3. - Full-load currents in amperes, three-phase alternating-current motors

	Induction type squirrel-cage and wound rotor amperes					Synchronous type unity power factor amperes			
HP	115 V	230 V	460 V	575 V	2300 V	220 V	440 V	550 V	2300 V
1/2	4.0	2.0	1.0	0.8					
3/4	5.6	2.0	1.4	1.1					
1.0	7.2	3.6	1.8	1.4					
1-1/2	10.4	5.2	2.6	2.1					
2.0	13.6	6.8	3.4	2.7					
3.0		9.6	4.8	3.9					
5.0		15.2	7.6	6.1					
7-1/2		22.0	11.0	9.0					
10.0		28.0	14.0	11.0					
15.0		42.0	21.0	17.0					
20.0		54.0	27.0	22.0					
25.0		68.0	34.0	27.0		54.0	27.0	22.0	
30.0		80.0	40.0	32.0		65.0	33.0	26.0	
40.0		104.0	52.0	41.0		86.0	43.0	35.0	
50.0		130.0	65.0	52.0		108.0	54.0	44.0	
60.0		154.0	77.0	62.0	16.0	128.0	64.0	51.0	12.0
75.0		192.0	96.0	77.0	20.0	161.0	81.0	65.0	15.0
100.0		248.0	124.0	99.0	26.0	211.0	106.0	85.0	20.0
125.0		312.0	156.0	125.0	31.0	264.0	132.0	106.0	25.0
150.0		360.0	180.0	144.0	37.0		158.0	127.0	30.0
200.0		480.0	240.0	192.0	49.0		210.0	168.0	40.0

For full-load currents of 208- and 200-volt motors, increase the corresponding 230-volt motor full-load current by 10 and 15 percent, respectively.

*These values of full-load current are for motors running at speeds usual for belted motors and motors with normal torque characteristics. Motors built for especially low speeds or high torques may require more ru#ning current, and multispeed motors will have full-load current varying with speed, in which case the nameplate current rating shall be used.

*For 90 and 80 percent P.F., the above figures shall be multiplied by 1.1 and 1.25 respectively.

The voltages listed are rated motor voltages. Corresponding nominal system voltages are 110 to 120, 220 to 240 440 to 480 and 550 to 600 volts.

SOURCE: ***National Electrical Code, 1968 Edition (NFPA No. 7-1968; USAS C1-1968).*** National Fire Protection Association

APPENDIX D

Minimum requirements for short circuit and overload protection for motors and motor circuit conductors

Table D-I.—Motor and circuit protection, 110- to 120volt single-phase motors

HP	Full-load current of motor	*Minimum size of power conductor (AWG)	Minimum size of ground conductor (AWG)	**Instantaneous branch circuit protection, 700% of motor full	Maximum thermal motor running protection
1/4	5.8	14.0	14.0	41.0 amp	8.0 amp
1/3	7.2	14.0	14.0	51.0 amp	9.0 amp
1/2	9.8	14.0	14.0	69.0 amp	13.0 amp
3/4	13.8	14.0	14.0	97.0 amp	18.0 amp
1.0	16.0	14.0	14.0	112 amp	20.0 amp
1-1/2	20.0	12.0	12.0	140.0 amp	25.0 amp
2.0	24.0	10.0	10.0	168.0 amp	30.0 amp
3.0	34.0	10.0	10.0	238.0 amp	43.0 amp
5.0	56.0	8.0	8.0	392.0 amp	70.0 amp
7-1/2	80.0	6.0	9.0	560.0 amp	100.0 amp
10.0	100.0	4.0	7.0	700.0 amp	125.0 amp

*Based on 75°C insulation, 20°C ambient temperature, single copper conductor in free air.

**The setting of an instantaneous trip circuit breaker may be increased above these values to allow proper starting of the motor but shall in no case exceed 1300 percent of the motor full-load current.

Table D-2.—Motor and circuit protection, 200- to 240-volt single-phase motors

HP	Full-load current of motor	*Minimum size of power conductor (AWG)	Minimum size of ground conductor (AWG)	**Instantaneous branch circuit protection, 700% of motor full	Maximum thermal motor running protection
1/4	2.9	14.0	14.0	21.0 amp	4.0 amp
1/3	3.6	14.0	14.0	26.0 amp	5.0 amp
1/2	4.9	14.0	14.0	35.0 amp	7.0 amp
3/4	6.9	14.0	14.0	4.9 amp	9.0 amp
1.0	8.0	14.0	14.0	56.0 amp	10.0 amp
1-1/2	10.0	14.0	14.0	70.0 amp	13.0 amp
2.0	12.0	14.0	14.0	84.0 amp	15.0 amp
3.0	17.0	14.0	14.0	119.0 amp	22.0 amp
5.0	28.0	10.0	10.0	196.0 amp	35.0 amp
7-1/2	40.0	8.0	8.0	280.0 amp	50.0 amp
10.0	50.0	8.0	8.0	350.0 amp	63.0 amp

*Based on 75°C insulation, 20°C ambient temperature, single copper conductor in free air.

**The setting of an instantaneous trip circuit breaker may be increased above these values to allow proper starting of the motor but shall in no case exceed 1300 percent of the motor full-load current.

Table D-3.—Motor and circuit protection, 220- to 240-volt three-phase motors

HP	Full-load current of motor	Minimumum cable size (AWG) Portable cord	75°C portable cable	90°C portable cable	*Instantaneous branch ciruit Protection, of motor full load current	**Inverse time breaker rating
1.0	3.6	18.0	—	—	26.0 amp	—
1-1/2	5.2	18.0	—	—	37.0 amp	15.0
2.0	6.8	16.0	—	—	48.0 amp	20.0
3.0	9.6	14.0	—	—	68.0 amp	25.0
5.0	15.2	12.0	—	—	107.0 amp	40.0
7-1/2	22.0	10.0	—	—	154.0 amp	60.0
10.0	28.0	8.0	—	—	196.0 amp	70.0
15.0	42.0	—	8.0	8.0	294.0 amp	110.0
20.0	54.0	—	6.0	8.0	378.0 amp	150.0
25.0	68.0	—	4.0	6.0	476.0 amp	175.0
30.0	80.0	—	4.0	4.0	560.0 amp	200.0
40.0	104.0	—	2.0	3.0	728.0 amp	300.0
50.0	130.0	—	1.0	2.0	910.0 amp	350.0
60.0	154.0	—	2/0	1/0	1,078 amp	400.0
75.0	192.0	—	3/0	2/0	1,344 amp	500.0
100.0	248.0	—	300 MCM	4/0	1,736 amp	700.0

Note: *The setting of an instantaneous trip circuit breaker may be increased above these values to allow proper starting of the motor but shall in no case exceed 1300 percent of the motor fullload current.

**The rating of an inverse time circuit breaker may be increased above these values to allow proper starting of the motor but shall in no case exceed 400 percent of the motor fullload current.

Table D-4.—Motor and circuit protection 220- to 240-volt three-phase motors

HP	Full-load current of motor	Minimumum cable size (AWG) Portable cord	75°C portable cable	90°C portable cable	*Instantaneous branch ciruit Protection, of motor full load current	**Inverse time breaker rating
1.0	1.8	18.0	—	—	13.0 amp	—
1-1/2	2.6	18.0	—	—	19.0 amp	—
2.0	3.4	18.0	—	—	24.0 amp	—
3.0	4.8	18.0	—	—	34.0 amp	15.0
5.0	7.6	16.0	—	—	54.0 amp	20.0
7-1/2	11.0	14.0	—	—	77.0 amp	30.0
10.0	14.0	12.0	—	—	98.0 amp	35.0
15.0	21.0	10.0	—	—	147.0 amp	60.0
20.0	27.0	8.0	—	—	189.0 amp	70.0
25.0	34.0	6.0	—	—	238.0 amp	90.0
30.0	40.0	4.0	8.0	—	280.0 amp	100.0
40.0	52.0	2.0	6.0	8.0	364.0 amp	150.0
50.0	65.0	—	6.0	6.0	455.0 amp	175.0
60.0	77.0	—	4.0	4.0	539.0 amp	200.0
75.0	96.0	—	3.0	4.0	672.0 amp	250.0
100.0	124.0	—	1.0	2.0	868.0 amp	350.0
125.0	156.0	—	2/0	1/0	1,092 amp	400.0
150.0	180.0	—	3/0	2/0	1,260 amp	450.0
200.0	240.0	—	200.0 MCM	4/0	1680.0 amp	600.0

Note: *The setting of an instantaneous trip circuit breaker may be increased above these values to allow proper starting of the motor but shall in no case exceed 1300 percent of the motor fullload current.

**The rating of an inverse time circuit breaker may be increased above these values to allow proper starting of the motor but shall in no case exceed 400 percent of the motor fullload current.

Table D-5.—Motor and short circuit protection, 550- to 600-volt three-phase motors

HP	Full-load current of motor	Minimumum cable size (AWG) Portable cord	75°C portable cable	90°C portable cable	branch ciruit Protection, of motor full load current	**Inverse time breaker rating
1.0	1.4	18.0	—	—	10.0 amp	—
1-1/2	2.1	18.0	—	—	15.0 amp	—
2.0	2.7	18.0	—	—	19.0 amp	—
3.0	3.9	18.0	—	—	28.0 amp	15.0
5.0	6.1	16.0	—	—	43.0 amp	20.0
7-1/2	9.0	14.0	—	—	63.0 amp	25.0
10.0	11.0	14.0	—	—	77.0 amp	30.0
15.0	17.0	10.0	—	—	119.0 amp	50.0
20.0	22.0	10.0	—	—	154.0 amp	60.0
25.0	27.0	8.0	—	—	189.0 amp	70.0
30.0	32.0	6.0	—	—	224.0 amp	80.0
40.0	41.0	4.0	8.0	—	287 amp	110.0
50.0	52.0	2.0	6.0	8.0	364 amp	150.0
60.0	62.0	2.0	6.0	6.0	434.0 amp	175.0
75.0	77.0	—	4.0	4.0	539.0 amp	200.0
100.0	99.0	—	3.0	3.0	693.0 amp	250.0
125.0	125.0	—	1.0	2.0	875.0 amp	350.0
150.0	144.0	—	1.0	1.0	1,008 amp	400.0
200.0	192.0	—	3/0	2/0	1,344 amp	500.0

Note: *The setting of an instantaneous trip circuit breaker may be increased above these values to allow proper starting of the motor but shall in no case exceed 1300 percent of the motor fullload current.

**The rating of an inverse time circuit breaker may be increased above these values to allow proper starting of the motor but shall in no case exceed 400 percent of the motor fullload current.

Table D-6. - Motor and circuit protection, 230- to 250-volt three-phase motors

HP	Full-load current	Minimumum cable size (AWG) Portable cord	75°C portable cable	90°C portable cable	Maximum branch ciruit protection Fuse rating	Instantaneous breaker setting	Inverse time breaker
1/4	1.5	18	—	—	2.25	4	—
1/2	2.6	18	—	—	4	7	—
3/4	3.7	18	—	—	6.25	10	—
1	4.7	18	—	—	8	12	—
1-1/2	6.6	18	—	—	10	17	15
2	8.5	16	—	—	15	22	15
3	12.2	14	—	—	20	21	20
5	20	12	—	—	30	50	30
7-1/2	29	8	—	—	45	73	45
10	38	6	8	—	60	95	60
15	55	4	6	8	90	138	90
20	72	2	4	6	110	180	110
25	89	—	4	6	150	223	150
30	106	—	2	4	175	265	175
40	140	—	1	2	225	350	225
50	173	—	2/0	1	300	433	300
60	206	—	3/0	1/0	350	361	350
75	255	—	4/0	3/0	400	447	400
100	341	—	400 MCM	200 MCM	600	597	600
125	425	—	2-3/0	400 MCM	700	744	700
150	506	—	2-4/0	2-3/0	800	886	800
200	675	—	2-400 MCM	2-250 MCM	1000	1182	1000

Note: *The setting of an instantaneous trip circuit breaker may be increased above these values to allow proper starting of the motor but shall in no case exceed 1300 percent of the motor full-load current.

**The rating of an inverse time circuit breaker may be increased above these values to allow proper starting of the motor but shall in no case exceed 400 percent of the motor full-load current.

APPENDIX E

Acceptable compounds and materials for lining and insulating battery-box covers and cable reels

TABLE E-I.—Acceptable compounds for lining battery-box covers (as of May 1, 1988)

Company	Insulation	MSHA Acceptance No.
1. Alpha Fabricators, Inc.	ALP 300 Plastisol coating	BI-11
2. Alpha Fabricators, Inc.	ALP 400 Urethane	BI-11/1 and BI-11/2
3. Barrett Battery, Inc.	Protech High Build epoxy powder coatings	BI-4
4. Barrett Battery, Inc.	Protech modified polyester, epoxy resin coatings	BI-5
5. C & D Battery Div.	Megtek chemical casting compound X-811	BI-8
6. Dexter Corporation	4004-A100 Yellow high solids and enamel 17000-A107 clear hardener	BI-12
7. Exide Corporation	Swift Z12-306 hot melt	*
8. Exide Power Systems Division	Dexter Corporation Urethane coating No. 8004-T13J	BI-2
9. Gates Engineering	N-350 neoprene	*
10. Gates Engineering	UMR-FR-27 polyurethane	*
11. General Battery Corp.	Arbonite No. S-2002	*
12. Gould, Inc.	Denflex No. 9309 Electrical PVC Plastisol	BI-3
13. Gould, Inc.	Dexter Corporation Yellow Micothane Enamel No. 8004-T18J	BI-7
14. M & T Chemicals, Inc.	M & T 8504-A powder M & T color no. Y-132	BI-6 BI-6 Ext.
15. Metal Cladding, Inc.	Type MCI-SIW03 and MCI-SIW04 Plastisol	*
16. Michigan Chrome & Chemical Co.	Microsol S-2003 (S6006)	*
17. Mobil Chemical	Orange plastisol 748-Y-1213A	*
18. Piedmont Paint Mfg. Co.	Piedmont epoxy 7513/7514 dry coating	BI-10
19. The Polymer Corp.	Corvel vinyl (melt mix type)	*
20. The Polymer Corp.	Corvel Type ECA-1283	*
21. The Polymer Corp.	Corvel Type ECA-1555 thin film epoxy	*
22. Pratt and Lambert	Vitralon epoxy powder coating (Yellow 84-596)	BI-9
23. Products Research Corporation	PR-1524 Polyurethane	*
24. Protech Chemicals, Limited	Epoxy Resin E400YI	BI-13
25. Quelcor, Inc.	Flexsol 8 (valspar plastisol)	*
26. Quelcor, Inc.	Flexsol 4374	*
27. Reaco Battery Service Corporation	Dupont neoprene	BI-1
28. The Gilman Co., Inc.	Gil-Poxy safety yellow 95-38	BI-1
29. Glidden Coatings and Resins	Polyester resin MWCC-001 (Pulvalure GE110)	BI-15
30. Glidden Coatings and Resins	Polyester Resin MWCC-002 (Pulvalure GE1551)	BI-15/1

* Accepted prior to the issuance of MSHA acceptance numbers.

In addition to the above, all compounds used as covers or jackets of conveyor belts, conduit hose, and trailing cables that have been listed as flame resistant by the Mine Safety and Health Administration are also acceptable.

TABLE E-2.—Acceptable materials for insulating cable reels (as of May, 1988)

Company or Manufacturer	Material
1. 3M CompanyScotch	210 Epoxy Insulation
2. Stonehard Company	Stonehard Thermoliner
3. Hysol Corporation	Hysol DK1-02 Epoxy
4. National Electric Coil	Neccoware No. 15
5. Bradshaw Industries, Inc.	Hetron 92 Durez Polyester Resin
6. Guyan Machinery Company	Compound 8742-65 Epoxy (Green)
7. Guyan Machinery Company	Compound 3701-15 Urethane (Red or Clear)
8. Guyan Machinery Company	Compound 7259
9. Western Slate Company	Durel ED-IX3A
10. Fiberglass Manufactured Products	Fiberglass (USMSHA, CR-I)
11. Joy Manufacturing Company	Nazerthane (USMSHA, CR-2)
12. Joy Manufacturing Company	2 Ply-Flame Resistant Neoprene Sheet
13. Control Products, Inc.	Neoprene and Epoxy
14. FMC	Fire Resistant - Neoprene Sheet
15. Ensign Electric Co.	N350 Neoprene and Dolph's Synthite ER-7
16. Service Machine Co.	N350 Neoprene
17. Plaza Industries, Inc.	Posi-Grip
18. Jeffrey Mining Machinery Div.	Glastic-Glass Mat
19. Harrelson Rubber Co.	"No Burn" Styrene Butadiene Rubber (SBR) Flame Retardant
20. Cadillac Plastic and Chemical Co.	Delrin Acetal Rod No. 1103 and Scotch No. 210 Paste
21. Polythane Enterprises, Inc.	Vibrathane B-15 Polyurethane (USMSHA CR-3)

In addition to the above, all compounds used as covers or jackets of conveyor belts, conduit hose, and trailing cables that have been *listed as flame resistant by the Mine Safety and Health Administration are also acceptable.*

APPENDIX F

MSHA-accepted ground wire devices for low and medium voltage

TABLE F-I.—MSHA-accepted ground wire devices for low and medium voltage

Company name	Type	Part number	Max. conductor	Saturation
AMF, Potter Brumfield Corp.	Inductor	39E149	250 MCM	25 V @ 25 amps
Central Electric Co.	Shunt	400M83G01	2/0 AWG	25.5 V @ 50 amps
*Ensign Electric	Inductor	6101-CL10	4/0 AWG	19 V @ 25 amps
Ensign Electric	Inductor	6101-1000-000	4/0 AWG	19 V @ 25 amps
Femco	Inductor	732902/302	250 MCM	8.1 V @ 20 amps
Femco	Inductor	GM-1004	250 MCM	11 V @ 10 amps
General Electric	Diode assm.	0208A8292		
Kaiser Aerospace & Electronics	Inductor	0196-001	2/0 AWG	
Line Power Manufacturing Corp.	Inductor	92-1004	250 MCM	18.2 V @ 25 amps
Motorola Corp.	Diode assm.	MRA 70065	4/0 AWG	6.5 V @ 25 amps
Ohio Brass Corp.	Diode assm.	510	4/0 AWG	
Pemco	Inductor	Size A	1/0 AWG	
Pemco	Inductor	Size B	2 AWG	
Power Distribution Products	Inductor	B2054-1	4/0 AWG	14.75 V @ 25 amps
Power Distribution Products	Inductor	B2054-4	350 MCM	12.3 V @ 25 amps
Sasser Electric Co.	Diode assm.	12003001	4/0 AWG	
Service Machine Co.	Diode assm.	A2596 Rev. B	350 MCM	
Service Machine Co.	Diode assm.	C1563	4.0	AWG

*No longer manufactured

NOTE: **Max. conductor** refers to the phase conductor size.

TABLE F-2.—MSHA-accepted ground wire devices for high voltage

Company name	Type	Part number	Max. conductor	Saturation
American Mine Research Inc.	Inductor	TW71697	250 MCM	23 V @ 25 amps
American Mine Research Inc.	Inductor	132-0020	250 MCM	23 V @ 25 amps
American Mine Research Inc.	Inductor	TW71698	500 MCM	24 V @ 25 amps
American Mine Research Inc.	Inductor	132-0022	500 MCM	24 V @ 25 amps
AMF, Potter Brumfield Corp.	Inductor	39E149	250 MCM	25 V @ 25 amps 25.5 V @ 50 amps
Central Electric Co.	Shunt	400M82GOI	500 MCM	
Femco	Inductor	GM-2004A	400 MCM	9.68 V @ 25 amps
Femco	Inductor	GM-2004B	300 MCM	
Femco	Inductor	GM-2004C	2/0 AWG	
*Ohio Brass Corp.	Diode assm.	501-X2	350 MCM	
Power Distribution Products	Inductor	B2054-4	350 MCM	12.3 V @ 25 amps
Service Machine Co.	Diode assm.	C1563	4/0 AWG	

*No longer manufactured

NOTE: **Max. Conductor** refers to the phase conductor size.

APPENDIX G

Glare suppression materials approved as of June 30, 1982

Light manufacturers	Model	Type of diffuser	
McJunkin/Koehler	#400 Tri-Plane 150W sod	**Min** -	One layer of TFE teflon tape plus one layer of Kapton tape.
		Max -	Two layers of TFE teflon tape and additional back and side shielding when in operator's line of sight.
Bacharach	VHO flu	**Max** -	One layer of 0.005-inch thick polycarbonate and one layer of 0.006-inch thick mylar.
MSA	VHO flu	**Min** -	One layer of external snap-on nylon material.
		Max -	Two layers of external snap-on nylon material.
NMS	VHO flu	**Min** -	Coarse-grained polycarbonate (both sides) running the full length inside the luminaire lens with a 1.5-inch overlay.
		Max -	Coarse-grained polycarbonate (both sides) run ning the full length inside the luminaire lens with a 1.5-inch overlay plus a 5/8-inch strip of tinted polycarbonate running the full length of the tube. Overlay can be adjusted for operator's maximum comfort.
Ocenco	15/3	**Max** -	One layer of 0.004- to 0.015-inch thick mylar diffuser (frosted on both sides) with a minimum of 3/4-inch overlay of mylar placed along the longitudinal axis of the fixture.
Joy	VHO flu	**Min** -	Coarse-grained polycarbonate (both sides) running the full length inside the luminaire lens with a 1.5-inch overlay.
		Max -	Coarse-grained polycarbonate (both sides) running the full length inside the luminaire lens with a 1.5-inch overlay plus a 5/8-inch strip of tinted polycarbonate running the full length of the tube. Tinted strip to be adjusted for viewing comfort.

Light manufacturers	Model	Type of diffuser	
McJunkin/Koehler	VHO flu	**Min** -	One layer of the polycarbonate film material installed with the frosted side facing out.
		Max -	One layer of the polycarbonate film material plus the rotation of the reflector such that the reflector is between the center of the lamp and the operator's normal line of sight.
		Max -	One layer of film material plus 1/2-inch keybar steel added to the cage of the luminaire such that the keybar steel is between the center of the lamp and the operator's normal line of sight.
McJunkin/Koehler	#400 Tri-Plane 150W inc	**Min** -	With or without one layer of .002-inch thick Kapton tape.
McJunkin/Koehler	#400 Tri-Plane 175W MV	**Min** -	One layer of TFE teflon tape.
		Max -	Two layers of TFE teflon tape.
Crouse-Hinds	HPS & MV	**Min** -	Globe is painted yellow inside utilizing a frosted bulb inside.
		Max -	Globe is painted yellow inside with three bands (6 inches wide) of two-layer gray tape (3M Polyimide Film No. 5413) placed on the globe.
Crouse-Hinds	150W HPS & 100W MV Globe	**Min** -	Globe is painted white with a frosted lamp.
		Max -	Globe is painted white with one band (5-inch wide strip) of two layers of yellow tape (3M Polyimide Film No. 5413) with a 150W HPS coated lamp.
Crouse-Hinds	VHO flu	**Min** -	Sand-blasted polycarbonate tube.
		Max -	Sand-blasted polycarbonate tube with a one-inch wide yellow paint stripe.
Crouse-Hinds	VHO flu	**Max** -	Sand-blasted polycarbonate tube with a strip of two-inch wide gray tape (3.5 mil. thick 3M No. 5490).

Light manufacturers	Model	Type of diffuser
Crouse-Hinds	150W incd	**Max** - One layer Kapton tape.
		Min - Clear lens.
Control Products	150W incd	**Max** - One layer of Kapton tape or high temperature frosting by Westinghouse.
		Min - Clear lens.
Mining Controls	150W incd	**Max** - One layer of Kapton tape or high temperature frosting by Westinghouse.
		Min - Clear lens.
Ocenco	15 incd	**Min** - Clear lens.
		Max - One layer of Kapton tape.

A&C Center approves the permissible integrity and glare suppression methods of the luminaire incorporating the glare suppression materials.

APPENDIX H

Continuous ampere ratings and magnetic trip ranges/adjustment positions for common molded case circuit breakers

Table H-1.—Continuous ampere ratings and magnetic trip ranges/adjustment positions for Westinghouse standard front-adjustable magnetic-only circuit breakers

Breaker type	Continuous rating amps	Magnetic trip range/adjustment positions low to high →												
		Low	1	2	3	4	5	6	7	8	9	10	11	12	High
FB	3	7	8	8.5	9	10	11	12	13	15	16	18	19	20	22
FB	5	15	17	18	20	22	24	26	28	30	33	36	39	42	45
FB	10	35	40	45	50	55	60	65	70	80	85	90	100	105	110
FB	25	32	35	39	43	47	50	54	58	62	65	69	73	76	80
FB	25	66	75	80	85	90	100	110	120	130	140	150	165	175	190
FB	30	50	56	65	72	80	90	96	105	110	120	125	135	140	150
FB	30	90	100	110	115	125	140	155	170	185	200	215	230	250	270
FB	50	66	75	80	85	90	100	110	120	130	140	150	165	175	190
FB	50	160	180	195	210	230	250	285	320	350	380	405	430	455	480
FB	70	100	110	125	140	150	165	175	190	205	215	230	245	255	270
FB	100	150	170	190	205	225	250	285	320	350	380	405	430	455	480
FB	100	450	500	540	580	625	670	750	825	900	1000	1125	1250	1400	1550
FB	150	575	650	700	750	825	900	1050	1200	1300	1400	1500	1600	1700	1800
JB-KB	250	350	400	440	480	525	560	610	660						
JB-KB	250	625	700	780	860	940	1020	1050	1170						
JB-KB	250	750	850	930	1030	1125	1210	1300	1400						
JB-KB	250	875	980	1100	1200	1300	1400	1500	1640						
JB-KB	250	1125	1290	1425	1560	1700	1840	1980	2115						
JK-KB	250	1250	1400	1560	1720	1880	2040	2100	2340						
LBB-LB	400	350	400	440	480	525	560	610	660						
LBB-LB	400	625	700	780	860	940	1020	1050	1170						
LBB-LB	400	750	850	930	1030	1125	1210	1300	1400						
LBB-LB	400	875	980	1100	1200	1300	1400	1500	1640						
LBB-LB	400	1125	1290	1425	1560	1700	1840	1980	2115						
LB8-LB	400	1500	1690	1875	2065	2250	2440	2630	2815						
LBB-LB	400	2000	2250	2500	2750	3000	3250	3500	3750						
LA	600	1125	1265	1405	1555	1690	1830	1970	2110						
LA	600	1500	1685	1875	2060	2250	2435	2625	2810						
LA	600	2000	2250	2500	2750	3000	3250	3500	3750						
LA	600	2500	2815	3125	3440	3750	4065	4375	4690						
LA	600	3000	3375	3750	4125	4500	4875	5250	5625						

SOURCE: ***Application Data 29-160***, Westinghouse Electric Corporation, Low Voltage Breaker Division, Beaver, Pennsylvania 15009

Table H-2. - Continuous ampere ratings and magnetic trip ranges/adjustment positions for Westinghouse standard front-adjustable magnetic-only circuit breakers

Breaker type	Continuous rating amps	Magnetic trip range Continuously adjustable Low	High
LC	600	375	750
LC	600	450	900
LC	600	500	1000
LC	600	625	1250
LC	600	750	1500
LC	600	875	1750
LC	600	1000	2000
LC	600	1250	2500
LC	600	1375	2750
LC	600	1500	3000
LC	600	1750	3500
LC	600	2000	4000
LC	600	2250	4500
LC	600	2500	5000
LC	600	3000	6000
MC	800	2000	4000
MC	800	2500	5000
MC	800	3000	6000
MC	800	3500	7000
MC	800	4000	8000
NC	1200	2400	4800
NC	1200	2800	5000
NC	1200	3200	6000
NC	1200	3600	7000
NC	1200	4000	8000
NC	1200	4800	9600
PC	2000	3000	6000
PC	2000	3600	7200
PC	2000	4200	8400
PC	2000	4800	9600
PC	2000	5400	10800
PC	2000	6000	12500
PC	2500	3500	7000
PC	2500	4000	8000
PC	2500	4500	9000
PC	2500	5000	10000
PC	2500	6250	12500
PC	3000	3200	6400
PC	3000	3600	7200
PC	3000	4000	8000
PC	3000	5000	10000
PC	3000	6000	12000

Source: ***Application Data 29-160***. Westinghouse Electric Corporation, Low Voltage Breaker Division, Beaver, Pennsylvania 15009

Table H-3.—Continuous ampere ratings and magnetic trip ranges/adjustment positions for Westinghouse standard front-adjustable magnetic-only circuit breakers

Catalog No. 3-pole	Continuous rating amps	Trip setting positions Low	2	4	6	8	10	High
TEC36003	3	8	13	18	23	28	33	38
TEC36007	7	18	30	42	54	65	78	90
TEC36015	15	42	68	94	120	146	172	198
TEC36030	30	90	140	190	240	290	340	390
TEC36050	50	180	260	340	420	500	580	660
TEC36100	100	300	468	636	804	972	1140	1308
TEC36150	150	600	950	1300	1650	2000	2350	2700
		Low	2	3	4			High
TFC36225A	225	1000	1325	1650	1950			2250
TJC36400B	400	1200	1400	1880	2500			4000
TJC36600A	600	1800	2400	3300	4500			6000
TKC36800A	800	2400	3200	4400	6000			8000
TKC361200A	1200	2400	3200	4400	6000			8000

Catalog No. 3-pole	Continuous rating amps	Trip setting positions Low	2	4	6	8	10	High
TEC26007	7	18	30	42	54	66	78	90
TEC26015	15	42	68	94	120	146	172	198
TEC26030	30	90	140	190	240	290	340	390
TEC26050	50	180	260	340	420	500	580	660
TEC26100	100	300	468	635	804	972	1140	1308
TEC26150	150	600	950	1300	1650	2000	2350	2700

Source: General Electric Company

TABLE I-1.—Resistance values for trolley wires, trolley feeder wires, and parallel combinations of trolley wires and trolley feeder wires

Trolley wire size (AWG or circular mils)	Parallel feeder wire size, copper or copper equivalent (AWG or circular mils)[1]	Resistance[2] (Ohms/1000 Ft.)
4/0 AWG	none	0.05000
4/0 AWG	250,000	0.02292
4/0 AWG	300,000	0.02068
4/0 AWG	350,000	0.01884
4/0 AWG	400,000	0.01730
4/0 AWG	500,000	0.01487
4/0 AWG	750,000	0.01100
4/0 AWG	1,000,000	0.00873
4/0 AWG	1,500,000	0.00618
4/0 AWG	2,000,000	0.00478
350,000	none	0.03023
350,000	250,000	0.01763
350,000	300,000	0.01628
350,000	350,000	0.01511
350,000	400,000	0.01411
350,000	500,000	0.01245
350,000	750,000	0.00962
350,000	1,000,000	0.00784
350,000	1,500,000	0.00572
350,000	2,000,000	0.00450
400,000	none	0.02645
400,000	250,000	0.01628
400,000	300,000	0.01511
400,000	350,000	0.01411
400,000	400,000	0.01323
400,000	500,000	0.01176
400,000	750,000	0.00920
400,000	1,000,000	0.00756
400,000	1,500,000	0.00557
400,000	2,000,000	0.00441
none	4/0 AWG	0.05000
none	250,000	0.04232
none	300,000	0.03527
none	350,000	0.03023
none	500,000	0.02116
none	750,000	0.01411
none	1,000,000	0.01058
none	1,500,000	0.00705
none	2,000,000	0.00529

[1]The following are the equivalent copper wire sizes of all aluminum feeder wires:

All-Aluminum wire size (circular mils)	Equivalent copper wire size (AWG or circular mils)
336,400	4/0 AWG
477,000	300,000
795,000	500,000
1,192,500	750,000
1,590,000	1,000,000

[2]Resistance values were calculated from the following equation:

$$R \text{ (ohms/100 feet)} = \frac{10{,}580}{\text{Conductor size in circular mils}}$$

Table I-2.—Resistance values for track and parallel combinations of track and return feeder wires

Track size[1] (pounds/yard)	Parallel feeder, copper or copper equivalent (AWG or circular mils)	Resistance[2] (Ohms/1000 Ft.)
25 SB	none	0.04271
25 SB	none	0.02136
30 SB	none	0.35559
30 DB	none	0.01780
40 SB	none	0.02670
40 SB	4/0 AWG	0.01740
40 SB	250,000	0.01637
40 SB	500,000	0.01180
40 SB	1,000,000	0.00758
40 DB	none	0.02136
40 DB	4/0 AWG	0.01054
40 DB	250,000	0.01015
40 DB	500,000	0.00818
40 DB	1,000,000	0.00590
50 SB	none	0.02136
50 SB	4/0 AWG	0.01496
50 SB	250,000	0.01419
50 SB	500,000	0.01063
50 SB	1,000,000	0.00707
50 DB	none	0.01068
50 DB	4/0 AWG	0.00880
50 DB	250,000	0.00853
50 DB	500,000	0.00710
50 DB	1,000,000	0.00531
60 SB	none	0.01780
60 SB	500,000	0.00967
60 SB	1,000,000	0.00664
60 SB	1,500,000	0.00505
60 SB	2,000,000	0.00408
60 DB	none	0.00890
60 DB	500,000	0.00626
60 DB	1,000,000	0.00483
60 DB	1,500,000	0.00393
60 DB	2,000,000	0.00332
70 DB	none	0.00763
70 DB	500,000	0.00561
70 DB	1,000,000	0.00443
70 DB	1,500,000	0.00366
70 DB	2,000,000	0.00312
85 DB	none	0.00628
85 DB	500,000	0.00484
85 DB	1,000,000	0.00394
85 DB	1,500,000	0.00332
85 DB	2,000,000	0.00287
90 DB	none	0.00593
90 DB	500,000	0.00463
90 DB	1,000,000	0.00380
90 DB	1,500,000	0.00322
90 DB	2,000,000	0.00280

[1]SB = single bonded track
DB = double bonded track

[2]Resistance values for single bonded track were calculated from the following equation:

$$R \text{ (ohms/1000 feet)} = \frac{1.0678}{\text{Track size (pounds/yard)}}$$

Resistance values for double bonded track were calculated from the following equation:

$$R \text{ (ohms/1000 feet)} = \frac{0.5339}{\text{Track size (pounds/yard)}}$$